Ina Road Wastewater Reclamation Facility

Digester Gas Equipment Replacement Project

CONCEPT DESIGN REPORT

April 2009

Registered Professional Engineer (Environmental)
CERTIFICATE NO.
32098
DANIEL F.
BUHRMASTER
Date Signed 4-15-09
ARIZONA, U.S.A.
EXPIRES 12/31/09

BLACK & VEATCH
building a world of difference™

TABLE OF CONTENTS

Page

1.0 BACKGROUND 1
2.0 DIGESTER GAS PRODUCTION ESTIMATE 3
3.0 DIGESTER GAS QUALITY 5
3.1 Digester Gas Contaminants 6
3.2 Target Gas Quality for Use in Engine Generators 10
4.0 DIGESTER GAS COMPRESSOR DESIGN 12
5.0 REVIEW OF GAS CLEANING OPTIONS 15
5.1 Applied Filter Technologies, Inc. (AFT) 15
5.2 Environmental Systems and Composites (ESC) 20
5.3 Energy Recovery Associates (ERA) 25
5.4 Gas Treatment System Comparison 26
6.0 OPINION OF COSTS FOR THE DIGESTER GAS TREATMENT ALTERNATIVES 28
6.1 Capital Costs 28
6.2 Annual Operations and Maintenance Costs 29
6.3 ERA's Business Model 31
7.0 NON-ECONOMIC CONSIDERATIONS 33
7.1 Experience 33
7.2 Performance 33
7.3 Complexity 33
7.4 Expandability 33
8.0 ALTERNATIVES AND RECOMMENDATIONS 35
9.0 ELECTRICAL AND CONTROLS 37
9.1 Electrical Power Distribution 37
9.2 Control System 38
10.0 SITE LOCATION FOR DIGESTER GAS TREATMENT FACILITIES 40

TABLES

Table 1. Digester Gas Production Estimate 3
Table 2. Current Digester Gas Production 4
Table 3. Digester Gas Quality 6
Table 4. H_2S Concentrations in Digester Gas 7
Table 5. Sample Sites for Siloxanes Measurements Shown in Figure 1 9
Table 6. Contaminant Concentrations in Raw Gas – Basis for Cleaning System Design 10
Table 7. Gas Quality Requirements for Use in Engine Generators 10
Table 8. Compressor Design Criteria 14
Table 9. Preliminary Sizing Criteria for Gas Treatment System by AFT 18
Table 10. Preliminary Sizing Criteria for Gas Treatment System by ESC 23
Table 11. Gas Treatment System Comparison 26
Table 12. Opinion of Costs for Digester Gas Treatment Systems 28
Table 13. Unit Cost Summary 29
Table 14. Annual Operating Costs for the Gas Treatment Systems 30
Table 15. ERA Business Model 31
Table 16. Total Present Worth and Annualized Unit Costs for Gas Treatment Alternatives 32
Table 17. Non-Economic Evaluation of Gas Treatment Alternatives 34

FIGURES

Figure 1. Comparison of Siloxane Concentrations in Digester Gas 9
Figure 2. Compressed Gas Piping Schematic 12
Figure 3. Compressor Performance Curve 13
Figure 4. Digester Gas Cleaning Equipment 15
Figure 5. AFT Gas Treatment System 16
Figure 6. AFT Gas Treatment System Footprint 19
Figure 7. ESC Gas Treatment System 20
Figure 8. ESC Gas Treatment System Footprint 24
Figure 9. ERA Gas Treatment System 25
Figure 10. Generator Switchgear One-Line Diagram 37
Figure 11. Partial Control System Network Diagram 39
Figure 12. Gas Treatment System Layout Options 40
Figure 13. Enlarged Site Plan - AFT 41
Figure 14. Enlarged Site Plan - ESC 42

APPENDICES

Appendix A – Digester Operating Records
Appendix B – AFT Engineering Report & Laboratory Reports
Appendix C – Supplier Reference Lists

1.0 BACKGROUND

The Pima County Regional Wastewater Reclamation Department (PCRWRD) owns the Ina Road Wastewater Reclamation Facility (WRF), located at 7101 N. Casa Grande Highway, Marana, Arizona in the northwest part of Tucson basin. The plant has a rated treatment capacity of 37.5 mgd. The solids treatment facilities at the plant include thickening, anaerobic digestion, and dewatering to produce Class B biosolids. The dewatered biosolids are hauled and land applied by a local contractor.

The thickened solids are fed to four anaerobic digesters. The digestion process generates approximately 331,000 standard cubic feet (scf) of digester gas per day. The digester gas is collected and compressed using four NASH liquid ring compressors. The compressed gas is sent to a gas chiller to remove excess moisture. The cooled digester gas then goes through a desiccant dryer and a refrigerant dryer in series prior to being used as fuel in engine generators for electrical power generation.

The current digester gas treatment system described above provides limited treatment for removal of hydrogen sulfide and siloxanes; these typical digester gas contaminants are known to cause corrosion and other damage in combustion engines. By improving the current digester gas treatment system, PCRWRD will see a decrease in costs associated with engine operations and maintenance, reduced air emissions, and improved engine performance. The digester gas equipment replacement project will result in a digester gas treatment system that cleans the digester gas to “engine quality” for combustion.

This conceptual design study includes the following activities:

- Assess available data on gas quantities and quality.
- Establish recommended gas quality parameters for the on-site power generation system which utilizes internal combustion engines.
- Evaluate the existing gas treatment equipment and determine if any existing equipment can be reused in the new digester gas treatment system.
- Evaluate available digester gas cleaning technologies offered by three different suppliers for removal of hydrogen sulfide, moisture, and siloxanes.
- Estimate capital and life-cycle costs, and evaluate non-economic factors associated with the three digester gas cleaning alternatives.

- Provide recommendation of the 'best-fit' digester gas treatment system to be included in the final project design.

2.0 DIGESTER GAS PRODUCTION ESTIMATE

Anaerobic digestion is a biological process in which bacteria break down (biodegrade) organic matter into digester gas, also known as biogas. The gas consists of methane (CH4), carbon dioxide (CO2), nitrogen (N2), and other trace amount of gases including hydrogen sulfide. The amount of digester gas produced can be measured with gas flow meters or estimated using an average biogas yield of 15 standard cubic feet of gas per pound (scf/lb) of volatile solids destroyed in the digesters. Biogas yield can range from 13 – 18 scf/lb of volatile solids destroyed for a typical municipal anaerobic digester handling primary and waste-activated sludges (WEF Manual of Practice FD-9, page 58).

Projected digester gas quantities for the gas cleaning evaluation were provided by CH2M Hill. The digester gas projections beginning in Year 2015 reflect digester gas generated from the total solids from both the Ina Road WRF and the Roger Road WRF. The design gas flow rates are listed in Table 1. These values reflect the total digester gas anticipated to be produced at each Digester Control Building and indicate the amount of gas the compressor systems will be designed to handle.

Table 1. Design Digester Gas Production

Year	Condition	Existing Control Building		New Control Building	
		Annual Average[1] (*scfm*)	Maximum Month[1, 2] (*scfm*)	Annual Average[1] (*scfm*)	Maximum Month[1, 2] (*scfm*)
2008	Current	340	415	--	--
2014	Interim	340	415	120	145
2015	Roger Road Solids Diversion	360	440	375	455
2030	Upgrade Ultimate Production	380	460	520	640

[1] *Gas quantities may increase by approximately 20% per CH2M Hill, should PCRWRD choose to implement thermophilic operation, but will not be included in the current design*

[2] *Maximum month gas flows estimated by applying a process scaling factor of 22% to annual average flows (provided by CH2M Hill)*

The digester gas production estimate provided by CH2M Hill for existing plant conditions was compared to the metered gas quantities from the 2008 digester operations data provided by PCRWRD, shown in Table 2. The projected average gas quantity is approximately 50 percent higher than the gas production reported in the digester operations data. PCRWRD has kept their gas flow meters in calibration and has confidence in the metered flow data.

Black & Veatch performed a general check of the design gas flow rates by calculating digester gas production based on the reported volatile solids loadings to the digesters and volatile solids reduction (VSR) from plant operations data, and using a typical biogas yield of 15 scf/lb of volatile solids destroyed in the digesters. The calculated average gas production was in concordance with the quantities projected by CH2M Hill as shown in Table 2. Black & Veatch also utilized the plant operations data to calculate an apparent biogas yield of 10 – 12 scf/lb of volatile solids destroyed, which is 20 – 35% lower than seen in typical municipal wastewater treatment facilities. The current digester operating records are attached in Appendix A.

It is beyond the scope of this report to resolve the difference in the design gas flow rates based on calculated flows versus metered flows. It was agreed by the project team to design a digester gas treatment system that can handle the calculated design flows from CH2M Hill, but also be able to operate at the lower metered gas flow rates.

Table 2. Current Digester Gas Production

Source ID	Gas Production	
	Annual Average (*scfm*)	Maximum Month (*scfm*)
CH2M Hill Projection	340	415[1]
Metered Gas Production[2]	245	352
Calculated Gas Production[3]	347	391

[1] *Maximum month flow estimated by applying a scaling factor of 22% to the annual average flow*

[2] *Based on 2008 plant operating data – includes metered and flared quantities*

[3] *Based on digester loadings and VSR for individual digesters and typical biogas yield of 15 scf/lb of volatile solids destroyed*

3.0 DIGESTER GAS QUALITY

Digester gas is composed primarily of methane (CH_4) and carbon dioxide (CO_2), with trace amounts of hydrogen (H_2), nitrogen (N_2), and contaminants such as hydrogen sulfide (H_2S) and organic silicon compounds known as siloxanes. Digester gas is also saturated with moisture; the amount of moisture varies with the operating temperature of the digesters with more moisture present at higher operating temperatures. If the digester gas is left untreated, the moisture and contaminants can cause corrosion or other damage to internal combustion engines, which will increase the maintenance requirements and reduce the useful life of the engines.

To determine the concentrations of various contaminants in the digester gas generated at the Ina Rd WRF, digester gas samples from several locations were collected on December 30, 2008 and January 8, 2009. The samples were analyzed for siloxanes, sulfur compounds and other components at Centek Laboratories, LLC, of Syracuse, New York, a laboratory designated by Applied Filter Technologies, Inc. (AFT). PCRWRD also collected independent digester gas samples on January 6, 2009, these samples were also tested at Centek Laboratories through AFT. A summary of the sampling results is presented in Table 3. The average digester gas quality data based on plant operating data for 2008 are also shown in Table 3 for comparison. Copies of the laboratory reports and the engineering report from AFT are attached in Appendix B.

Table 3. Digester Gas Quality

Parameter	*Units*	Concentration					
		Plant Data[1]	Raw Digester Gas		After Desiccant Dryer	After Refrigerant Dryer	
			B&V[2]	PCRWRD[3]	B&V[2]	B&V[2]	PCRWRD[3]
Composition							
Methane	%	59.3	54.2	56.9	59.9	60.1	62.4
Carbon dioxide	%	40.0	44.5	41.3	37.4	37.2	34.5
Nitrogen	%	0.3	1.0	1.38	2.0	2.1	2.51
Oxygen	%	--	0.27	0.37	0.69	0.65	0.60
Contaminants							
Hydrogen Sulfide	*ppmv*	2,840	3,200	54	4,600	12,000	53
Total Siloxanes	*ppbv*	--	1,654	5,063	4,857	4,865	3,900
Total VOCs	*ppbv*	--	3,239	4,529	9,204	14,745	4,486

[1] *Based on 2008 plant operating data*

[2] *Sample collected by B&V*

[3] *Sample collected by PCRWRD*

The methane concentrations in the digester gas samples fall within the typical range of 55 to 65 percent for digester gas, indicating a well-functioning digestion process (based on B&V experience).

3.1 Digester Gas Contaminants

Moisture

As the digester gas cools from the operating temperature of the digesters to ambient temperatures, some of the moisture in the gas condenses and reacts with the hydrogen sulfide to form sulfuric acid, which can corrode the gas collection and conveyance piping. To reduce the impact of moisture on gas utilization equipment, such as combustion engines, chillers or dryers are often used to cool the gas to approximately 40 °F to remove additional moisture as

condensate. The chilled gas is typically then reheated to ambient temperature before being sent to gas utilization equipment.

Hydrogen Sulfide (H_2S)

Hydrogen sulfide is present in most digester gas samples at typical concentrations ranging from 300 to 2,500 ppmv. The H_2S concentrations measured in the digester gas samples at Ina Rd WRF are highly variable, with higher concentrations detected after the refrigerant dryer. AFT indicated that H_2S concentrations higher than 3000 ppmv are difficult to accurately measure with the method used in the laboratory (Appendix B, pg. 4). Therefore, the average of the raw digester gas and the desiccant samples collected by B&V was selected to determine the gas cleaning requirements. For comparison, Table 4 shows the H_2S concentrations in digester gas from other plants in North America that have experience increased maintenance or damage to equipment due to hydrogen sulfide. Concentrations shown are for untreated (raw) digester gas.

Table 4. H_2S Concentrations in Digester Gas

Location	Concentration *ppmv*	Comments
Pima County, AZ	3,900	Possible increase maintenance due to H_2S
Colorado Springs, CO	2,900	Damage to equipment reported
Denver, CO	< 3,700	Increased maintenance for combustion turbines
Lubbock, TX	10,200 to 14,600	Serious deterioration of boilers
Rockford, IL	900	Damage to engine generators – installed gas cleaning system
San Antonio, TX	2,200	Scrubbing equipment installed for gas to flare to reduce SOx emissions

Hydrogen sulfide combines with moisture to form an acidic solution that corrodes pipes, valves and gas utilization equipment, which at the Ina Rd WRF are combustion engine generators. A typical limit for H_2S is 200 ppmv when the digester gas will be used in engines. However, the media used in the siloxane removal system has a higher affinity for H_2S than for siloxanes. Consequently, if the H_2S concentrations are not reduced to less than 25 ppmv, the life of the siloxane media drops significantly, increasing the overall system O&M costs.

CH2M Hill is currently designing facilities to add ferric salts to the digesters in the future. If adopted by PCRWRD, the ferric salt addition will reduce H_2S concentrations in the digester gas, which will lower the overall H_2S removal operating costs for the digester gas treatment system, either by prolonging the life of the media used in the dry scrubbers, or by reducing the chemical usage in the wet (chemical) scrubbers. The design hydrogen sulfide concentration does not affect the design capacity for the digester gas treatment system, since the equipment sizing is based on digester gas flow rates. The digester gas treatment system will be based on a hydrogen sulfide concentration of 3,900 ppmv, as given in Table 2.

Siloxanes

Siloxanes are organic compounds of silicon that have only recently been recognized as a contaminant in digester gas. The presence of these compounds in digester gas is related to their increased use in personal care products, such as shampoos, deodorants, detergents, and antiperspirants that use siloxanes to improve the physical characteristics of the product. Siloxanes in many forms are also used in a wide range of commercial, industrial, and medical products.

Siloxanes are volatile and are released into the gas phase during the anaerobic digestion process. Combustion of digester gas results in oxidation of siloxanes to silicon dioxide (SiO_2). SiO_2 is an abrasive solid, similar to fine sand, which can accumulate on moving parts or heat exchange surfaces, causing accelerated wear, contamination of lubrication oil and loss of heat transfer efficiency.

Prior to 2000, siloxanes were detected as D4 siloxanes, but were reported as “total siloxanes.” More recently, samples are analyzed for all the siloxane compounds, and typically only D4 and D5 siloxanes are found in concentrations above the detection limits. However, D6 siloxanes are increasing and beginning to reach detection limits as well. The concentrations of the various siloxane compounds are summed and reported as the total siloxanes. Total siloxane concentration is the number of interest when assessing the potential impact of siloxanes on combustion equipment.

The siloxane concentration in the digester gas samples collected by B&V at the Ina Rd WRF are illustrated in Figure 1 (identified as Site 21) along with siloxane concentration data from other wastewater treatment facilities compiled by Black & Veatch, for comparison purposes. A number of the data points are for D4 siloxanes only. The sample sites are listed in Table 5.

Table 5. Sample Sites for Siloxanes Measurements Shown in Figure 1

Site Numbers	Location	Comments
1 through 8	Various	Early data, probably D4 only
8 through 10	California	
9, 12 and 14 through 17	Upper Midwest	Recent data
13	Southwest	
18 through 20	Ashbridges Bay, Toronto	Before and after gas dryer
21	Columbia WWTP, MO	August 2007
22	Pima County, AZ	December 2008 – January 2009

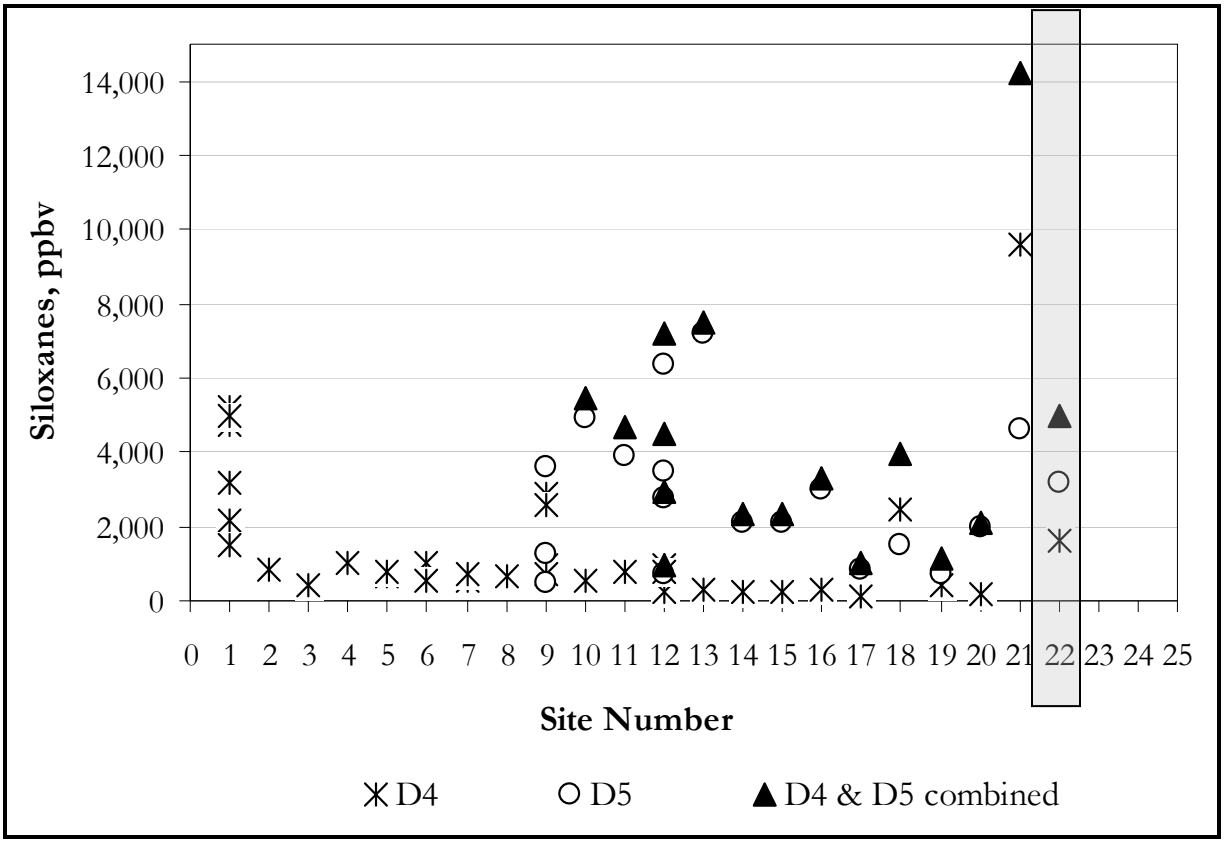

Figure 1. Comparison of Siloxane Concentrations in Digester Gas

The siloxane concentrations in the Ina Rd WRF digester gas samples fall in the middle to upper end of the typical concentration range (2,000 to 8,000 ppbv) observed at other facilities. Siloxanes are typically detrimental to gas utilization equipment at these concentrations.

The design contaminant concentration values for hydrogen sulfide and siloxanes in the raw digester gas are summarized below in Table 6. These values, along with the digester gas flow rates presented in Table 1, will be used to size the digester gas cleaning equipment for the proposed digester gas cleaning system.

Table 6. Contaminant Concentrations in Raw Gas – Basis for Cleaning System Design

Contaminant	Units	Concentration
Hydrogen Sulfide	*ppmv*	3,900
Siloxanes	*ppbv*	5,000

The digester gas sampling conducted only provides a snapshot of the digester gas at the time of sampling. The gas composition, especially the concentrations of hydrogen sulfide and siloxanes, may change with time depending on the feed characteristics and operating conditions of the digesters. The changes in contaminant concentrations can affect the media life and operation and maintenance costs. During the initial years of operation, it is advisable for the County to undertake a regular sampling and analysis program to quantify the contaminants and identify the variations in gas composition and the operating cost requirements.

3.2 Target Gas Quality for Use in Engine Generators

The design limits listed in Table 7 are based on utilizing the digester gas in engine generators.

Table 7. Gas Quality Requirements for Use in Engine Generators

Contaminant	Units	Design Limits
Moisture	--	40 ºF dew point minimum
Hydrogen Sulfide	*ppmv*	Less than 25[1]
Siloxanes	*ppbv*	Less than 150

[1]*Requirement to avoid impacts to siloxane removal system*

The target concentration for H_2S is based on the limits recommended by the gas cleaning system supplier for optimum media life in the downstream siloxane removal system. Higher H_2S concentrations in the digester gas to the siloxane scrubbers will reduce media life due to the higher affinity of the siloxane removal media for H_2S. As a result, the proposed H_2S concentration limit is lower than the limits typically required for digester gas use in engine generators.

The target concentration for siloxanes was established based on the standards recommended by an internal combustion engine supplier. Since engines are most affected by siloxanes in the gas, the siloxanes limits on engines represent the most severe limitations for the cleaning system.

4.0 DIGESTER GAS COMPRESSOR DESIGN

The digester gas produced at the Ina Rd WRF is compressed using four NASH liquid ring compressors for use in the engine generators. PCRWRD has a current JOC project that is replacing two of the existing compressors with new NASH units that will operate at approximately 25-30 pounds per square inch (psi) operating pressure. The new compressors will handle digester gas flows from the existing digesters. CH2M Hill is currently designing four new digesters and Digester Control Building, which will be located just west of the existing digesters. One new digester, Digester Control Building and two digester gas compressors will be installed soon to help handle increasing loads at the plant. Upon diversion of Roger Road WRF solids to the Ina Rd WRF (Year 2015), three additional digesters will be added as well as three additional digester gas compressors. A general digester gas flow schematic is given in Figure 2.

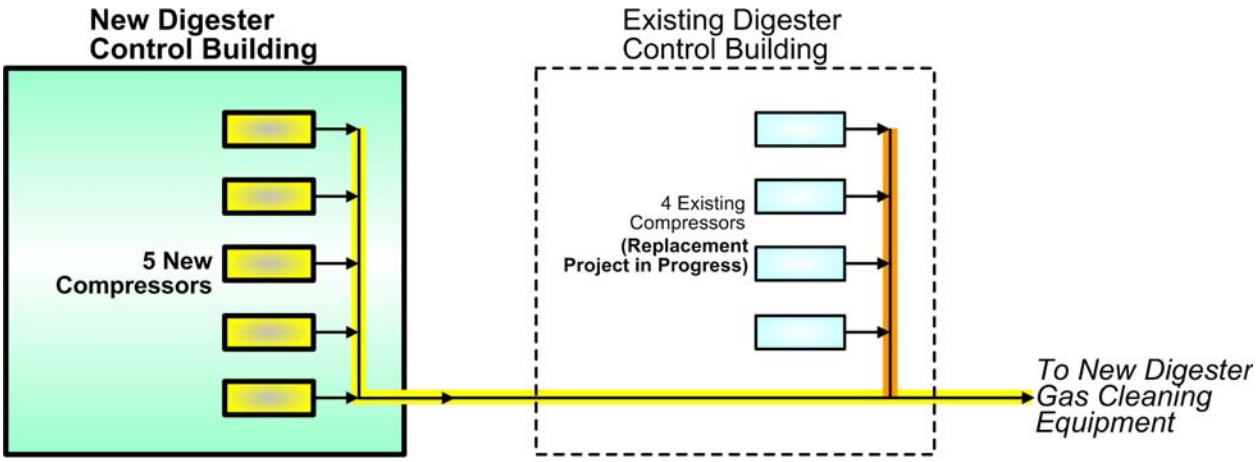

Figure 2. Compressed Gas Piping Schematic

The digester gas compressors currently being installed as a JOC project are suitable to handle the design digester gas flow range of 227 scfm to 460 scfm. The low end of the range corresponds to the current average metered gas production at the plant and the high end of the range indicates the projected maximum month flow from the Ina Rd WRF at Year 2030 ultimate conditions.

Based on the speed range and the performance curves provided by NASH, the optimum operating speed for the compressors is approximately 2,200 revolutions per minute (rpm). The compressor performance curve at this speed is illustrated in Figure 3. If the digester gas

treatment system requires a 30 psi inlet pressure, the compressors will be operating at the high end of their performance curve. Consequently, there is potential for higher wear due to continuous operation at 30 psi discharge pressure. Additionally, the performance curves are typically for operation at sea level, and performance will vary marginally at the Ina Road WRF.

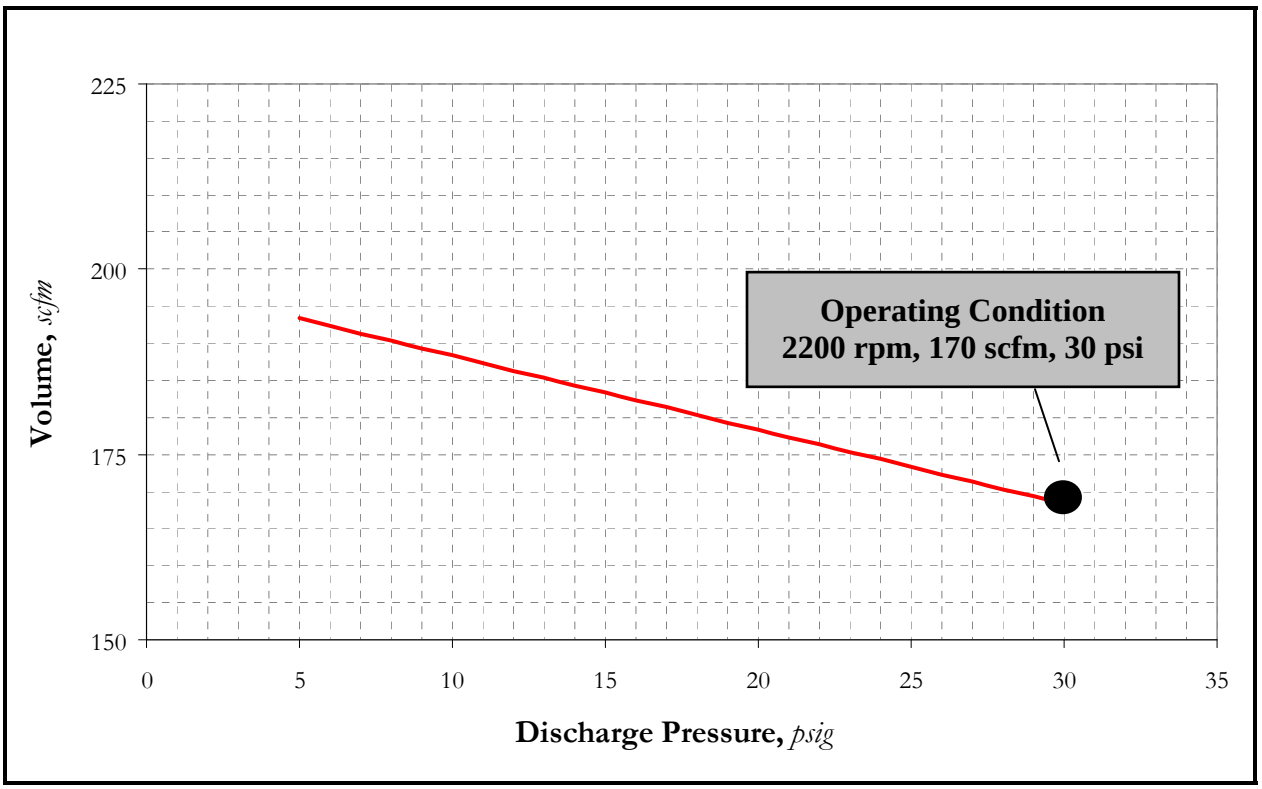

Figure 3. Compressor Performance Curve

The compressors are not equipped with variable frequency drives. Consequently, flow control to the compressors will be via bypass or spillback, which is the standard setup. A portion of the gas will be recycled from the discharge side of the compressor to the suction side via an intercooler and a control valve to maintain the minimum flow requirement. The number of units running and the flow bypass requirements under various operating conditions are summarized in Table 8. The bypass flow range will be specified for proper sizing of the bypass control valve.

Table 8. Compressor Design Criteria

Year	Annual Average Conditions			Maximum Month Conditions[1]		
	Gas Flow (*scfm*)	No. of Units	Bypass/Unit (*scfm*)	Gas Flow (*scfm*)	No. of Units	Bypass/Unit (*scfm*)
2008[2]	245	2	50	352	3	50
2008[3]	340	2	0	415	3	30
2014[3]	340	2	0	415	3	30
2015[3]	360	3	50	440	3	25
2030[3]	380	3	45	465	3	15

[1] *Maximum month gas flows estimated by applying a scaling factor of 22% to the annual average flows – the scaling factor was provided by CH2M Hill.*
[2] *Metered gas flows*
[3] *Projected gas flows*

A total of five gas compressors are recommended for the existing Digester Control Building; three operating, one in standby mode, and one in maintenance mode. Two compressors are required for current plant conditions based on metered gas flows for annual average conditions. However, for either maximum month conditions (metered) or calculated digester gas flows, three compressor units are required. Since the current JOC project is installing three compressors, two additional units will be required.

5.0 REVIEW OF GAS CLEANING OPTIONS

The digester gas treatment system will be sized based on treating all digester gas generated from both the Ina Road WRF and the Roger Road WRF at 2030 (ultimate design) conditions. The digester gas generated at the two facilities will be compressed and diverted through the digester gas cleaning equipment prior to utilization in the existing engine generators (Figure 4).

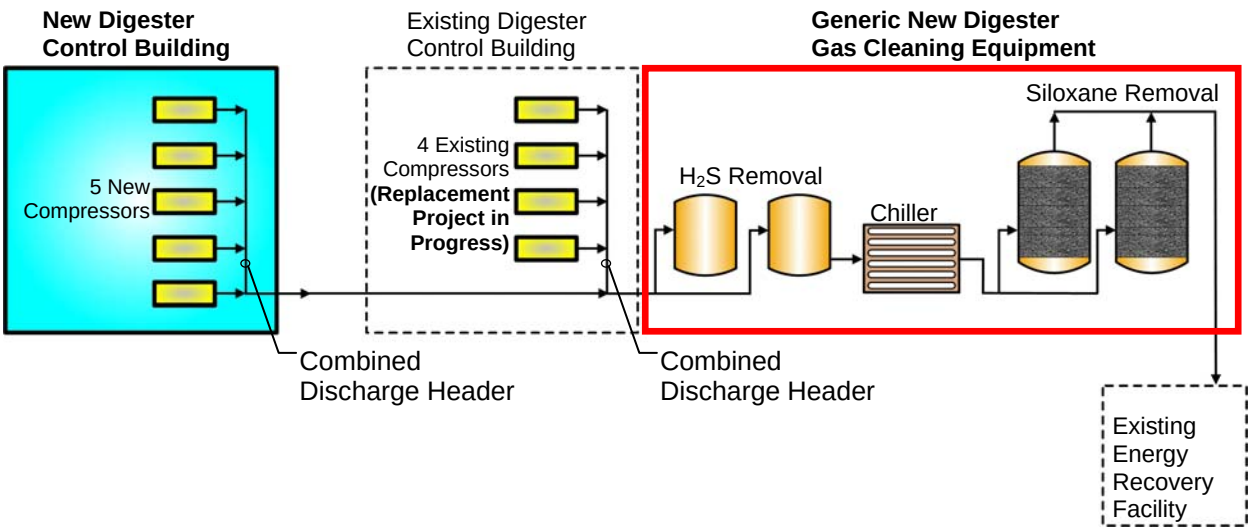

Figure 4. Digester Gas Cleaning Equipment

Three different system suppliers, (1) Applied Filter Technologies, Inc. (AFT), (2) Environmental Systems and Composites (ESC), and (3) Energy Recovery Associates (ERA), were contacted to obtain information on available digester gas cleaning equipment. Each of these vendors can furnish a complete system and offer a process guarantee. The following sections provide a discussion of the gas cleaning systems proposed by the three system suppliers.

5.1 Applied Filter Technologies, Inc. (AFT)

The gas treatment system proposed by AFT consists of a liquid scrubber for H_2S removal, glycol chiller for moisture removal, and a proprietary granular media contactor for siloxane removal. Figure 5 illustrates the proposed AFT system.

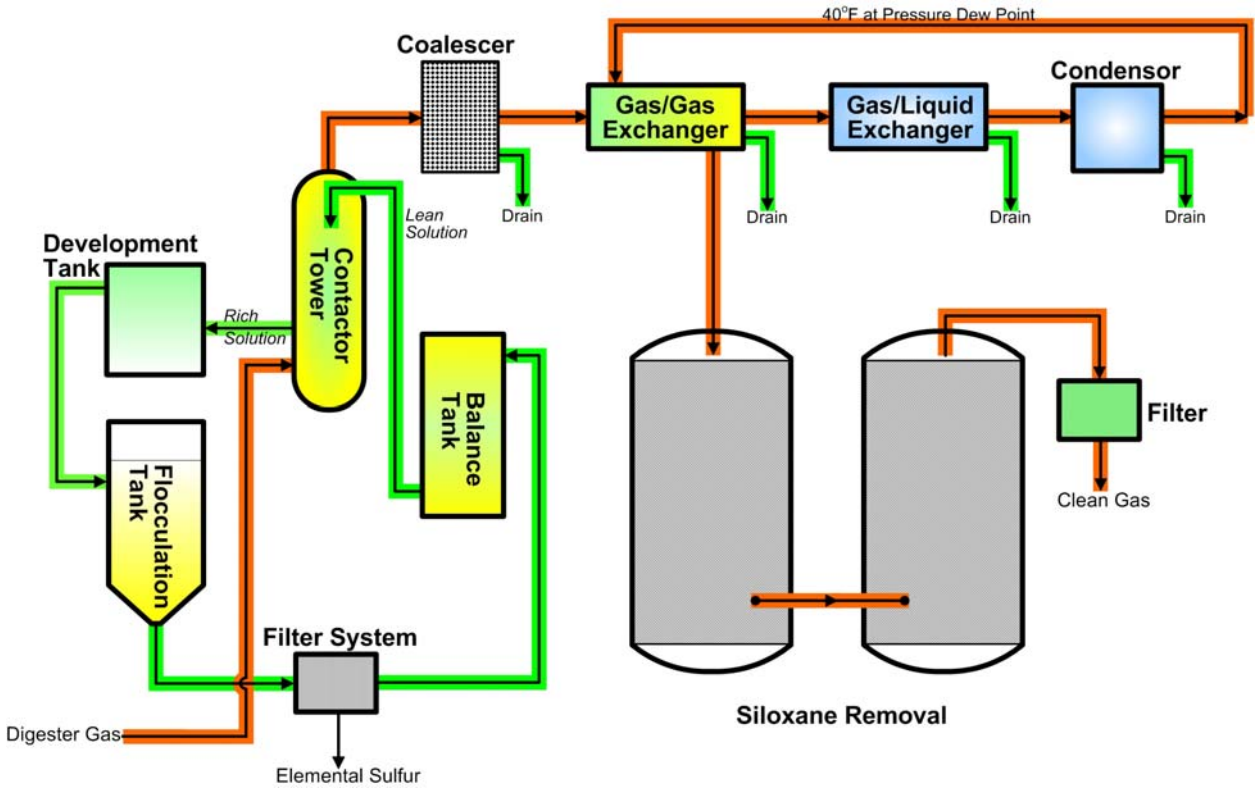

Figure 5. AFT Gas Treatment System

H_2S Removal

The liquid scrubbing used by AFT for H_2S removal converts H_2S to elemental sulfur. The contactor uses a dilute aqueous solution of iron, which is held in solution by organic chelating agents. The iron oxidizes H_2S to elemental sulfur, which is recovered using a dedicated filter press and can be used as a fertilizer or sent to a landfill for disposal. The recovered chemicals from the filter are recycled to the contactor tower. Chemicals for pH adjustment and makeup monocot are added to the recycled stream.

The sulfur stream from the flocculation tank is at a solids concentration of approximately 5 percent; diverting this stream back to the plant dewatering operations would result in the loss of scrubbing chemicals. The additional costs for chemical makeup would increase the overall H_2S removal costs approximately 10-fold. By recovering sulfur in a filter press and recycling the chemicals back to the contactor, AFT keeps operating chemical costs to a minimum.

Moisture Removal

Moisture removal is accomplished in a two-stage heat exchanger. The first stage is a reheat exchanger using the heat of the incoming gas to reheat the cold gas from the second stage. The second stage uses chilled glycol to cool the gas to a dew point of 40 ºF. After compression, the dew point of the gas will be lowered to approximately 40˚F. The gas is then reheated to achieve a relative humidity of less than 25%. This is accomplished through the use of two integrated dryer/recuperator heat exchangers and a glycol chiller. The condensate will be removed with a stainless steel gas-water separator. A condensate pump will be provided.

Siloxane Removal

The siloxane removal system consists of two stainless steel vessels in series, containing proprietary media. The media is not selective for siloxanes and will also remove any residual H_2S or VOCs. Consequently, the media would have to be replaced more frequently if H_2S and other VOC concentrations in the gas are not reduced before it reaches the carbon scrubber. AFT recommends an inlet H_2S concentration less than 25 ppmv to the siloxane removal system to ensure maximum life of the siloxane removal media. A particulate filter is provided at the discharge of the vessels to capture any entrained media dust.

The preliminary sizing criteria for the AFT gas treatment system are summarized in Table 9.

Table 9. Preliminary Sizing Criteria for Gas Treatment System by AFT

System	Criteria	Units	Flow Condition	
			Current	2030 - Future
Inlet Gas	Gas Flow	*scfm*	340	900
	Gas Pressure	*psi*	30 to 35	30 to 35
H_2S Removal System	Scrubber Media	*Type*	Liquid Chemicals	Liquid Chemicals
	Media Life	*days*	Replenished Continuously	Replenished Continuously
	Side Stream		Elemental Sulfur	Elemental Sulfur
Pressure Boosting & Moisture Removal	Compressor		Existing	Existing
	Gas-to-Gas HEX	*No.*	1	1
	Gas-to-Liquid HEX	*No.*	1	1
	Chilling Unit Capacity	*ton*	40	40
	Recirculation Capacity	*%*	100	100
Siloxane Removal System	Scrubber Media	*Type*	Proprietary	Proprietary
	No. Tanks	*No.*	2	4
	Tank Size (D X H)	*ft X ft*	4 X 8	4 X 8
	Total Media	*lb*	5,300	6,000
	Media Life	*days*	352	152
Pressure Drop through the System		*in. H_2O*	2.5 - 3	2.5 - 3

The approximate footprint of the gas treatment system offered by AFT is illustrated in Figure 6.

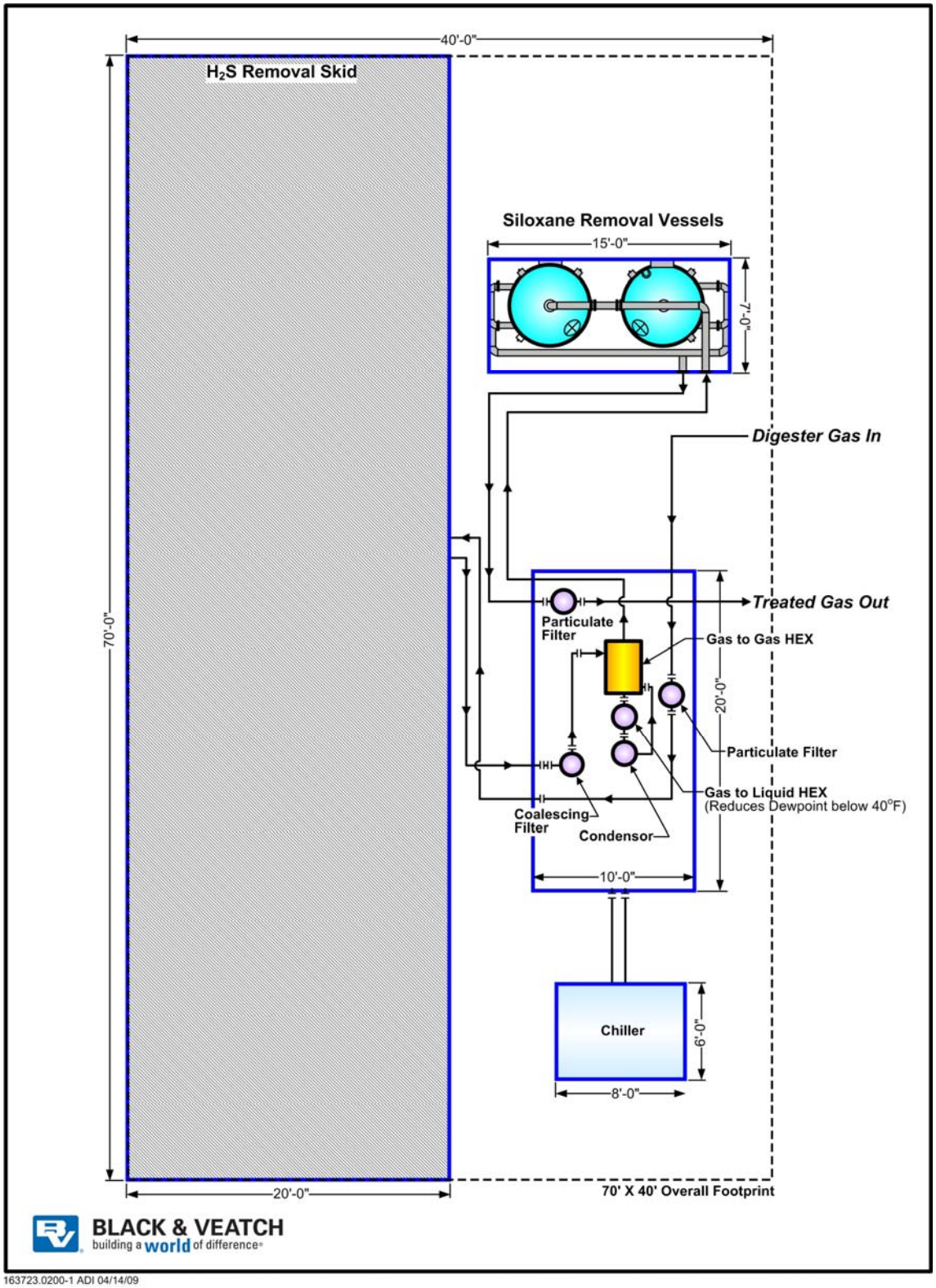

Figure 6. AFT Gas Treatment System Footprint

5.2 Environmental Systems and Composites (ESC)

The gas treatment system proposed by ESC consists of a wet scrubber and either an iron sponge or a SulfrTreat system for H_2S removal, with a chiller for moisture removal, and granular media for siloxane removal. Figure 7 is an illustration of the gas treatment system proposed by ESC.

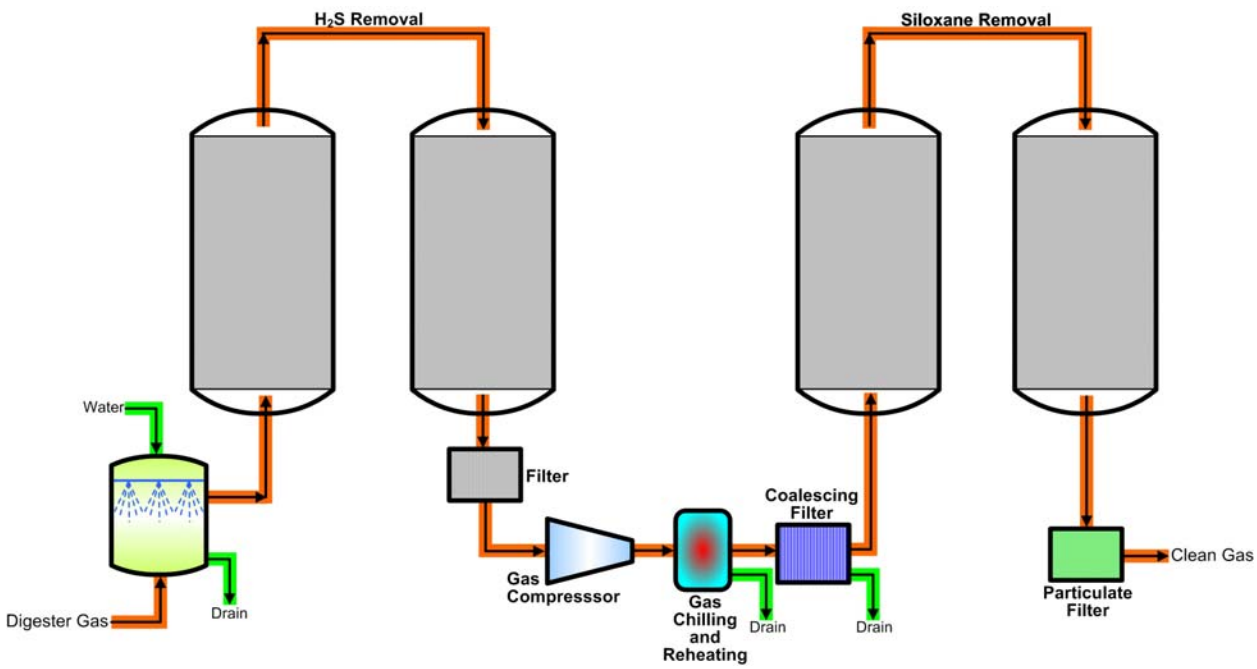

Figure 7. ESC Gas Treatment System

H_2S Removal

The H_2S removal system proposed by ESC is a two-stage process. The first-stage consists of a wet scrubber (single pass non-potable water scrubber) to remove up to 85 percent of the H_2S. The pre-treated gas is then diverted to the second-stage, where the remaining 15 percent of the H_2S is removed. The second H_2S removal stage consists of two fixed-bed sulfur removal vessels containing either iron sponge or SulfrTreat H_2S removal media. The two vessels are connected in series and configured for lead/lag operation. The two vessels are designed to be reversed in order, or isolated individually so that each vessel may be taken off line for media change out, while the second vessel is in operation.

ESC also indicated the possibility of replacing the non-potable water scrubber in the first stage with a chemical wet scrubber to improve H_2S removal efficiencies that to reduce H_2S loadings

on the second stage scrubbers. However, even with the use of chemicals in the first-stage wet scrubber, the second-stage fixed bed H_2S removal proposed by ESC would not be eliminated.

Iron-Sponge System. In the iron sponge process, digester gas is passed through a permeable bed of iron sponge (hydrated ferric oxide). The hydrated ferric oxide media used is typically in the form of iron-dipped wood chips, soaked in water. As H_2S passes through the iron media, an exothermic reaction takes place, converting H_2S to ferric sulfide (black solid) and water. This is a passive chemical reaction. There are no mechanical parts or operator interfaces required to make the sulfide removal process work. The exhausted media is usually a combination of ferric sulfide and wood chips. This is not a hazardous waste and can be taken to any landfill for disposal. However, the process of removing the media and refilling the vessel can be labor intensive.

SulfrTreat. SulfrTreat is a patented process where the H_2S laden digester gas is passed through a bed of granular media that selectively reacts with H_2S in the gas. The SulfrTreat media cannot be regenerated and the media would require replacement at regular intervals.

Moisture Removal

The moisture in digester gas is removed by chilling the gas using heat exchangers and chillers. The gas is first passed through a gas-to-gas heat exchanger, where it is cooled to lower the dew point of the gas to approximately 40 ˚F. The cooled gas is then reheated to a temperature above the dew point to prevent any remaining water vapor from condensing in the siloxane removal vessels.

The moisture removal system also includes a compressor for pressure boosting through the gas treatment system. Although ESC anticipates the total pressure drop through the gas treatment system to be less than 10 psig, there is the possibility that the media in the H_2S scrubbers may be coated with a crust of elemental sulfur. If this happens, pressure drops through the system can be higher, limiting the available pressure at the engine generators. The ESC system has instrumentation and controls to monitor H_2S concentrations and pressure drops through the system. Additional design considerations would include a bypass system that allows for bypassing a variable amount of raw gas by the sulfur removal vessels, while simultaneously going into an alarm condition if the pressure drop exceeds 10 psig.

Siloxane Removal

Siloxanes are removed in a two tank system using activated carbon media. The two tanks are plumbed identical to the H_2S vessels and are operated in series, either lead/lag or individually. Each vessel may be isolated to replace media.

The activated carbon scrubbers operate on the same principles as the carbon scrubbers used in many wastewater treatment plants for odor control. The organics (including siloxanes), hydrogen sulfide (H_2S), and any remaining VOCs in the digester gas, are adsorbed onto the carbon. With proper maintenance and periodic replacement of the carbon media, the residual siloxanes concentration in the digester gas is anticipated to be below detection limits. However, since activated carbon is not selective for siloxanes, the media would have to be replaced more frequently unless the organics are removed from the gas before it reaches the siloxane scrubber.

The preliminary sizing criteria for the gas treatment system proposed by ESC are summarized in Table 10.

Table 10. Preliminary Sizing Criteria for Gas Treatment System by ESC

System	Criteria	Units	Flow Condition	
			2014 - Interim	**2030 - Future**
Inlet Gas	Gas Flow	*scfm*	460	900
	Gas Pressure	*psi*	30 to 35	30 to 35
H_2S Removal System	**Stage 1**			
	Wet Scrubber (D X H)	*ft X ft*	3 X 25	3 X 25
	Stage 2			
	Scrubber Media	*Type*	Iron Sponge	Iron Sponge
	No. Tanks	*No.*	2	4
	Tank Size (D X H)	*ft X ft*	8 X 8	8 X 8
	Total Media	*lb*	35,000	70,000
	Media Life	*days*	180	180
Pressure Boosting & Moisture Removal	No. of Compressors	*No.*	1	1
	Outlet Pressure	*psi*	30	30
	Gas-to-Gas HEX	*No.*	1	1
	Gas-to-Liquid HEX	*No.*	1	1
	Chilling Unit Capacity	*ton*		
Siloxane Removal System	Scrubber Media	*Type*	Activated Carbon	Activated Carbon
	No. Tanks	*No.*	2	4
	Tank Size (D X H)	*ft X ft*	5 X 8	5 X 8
	Total Media	*lb*	9,420	18,840
	Media Life	*days*	120	120
Pressure Drop through the System		*in. H_2O*	10	10

The approximate footprint of the gas treatment system offered by ESC is illustrated in Figure 8.

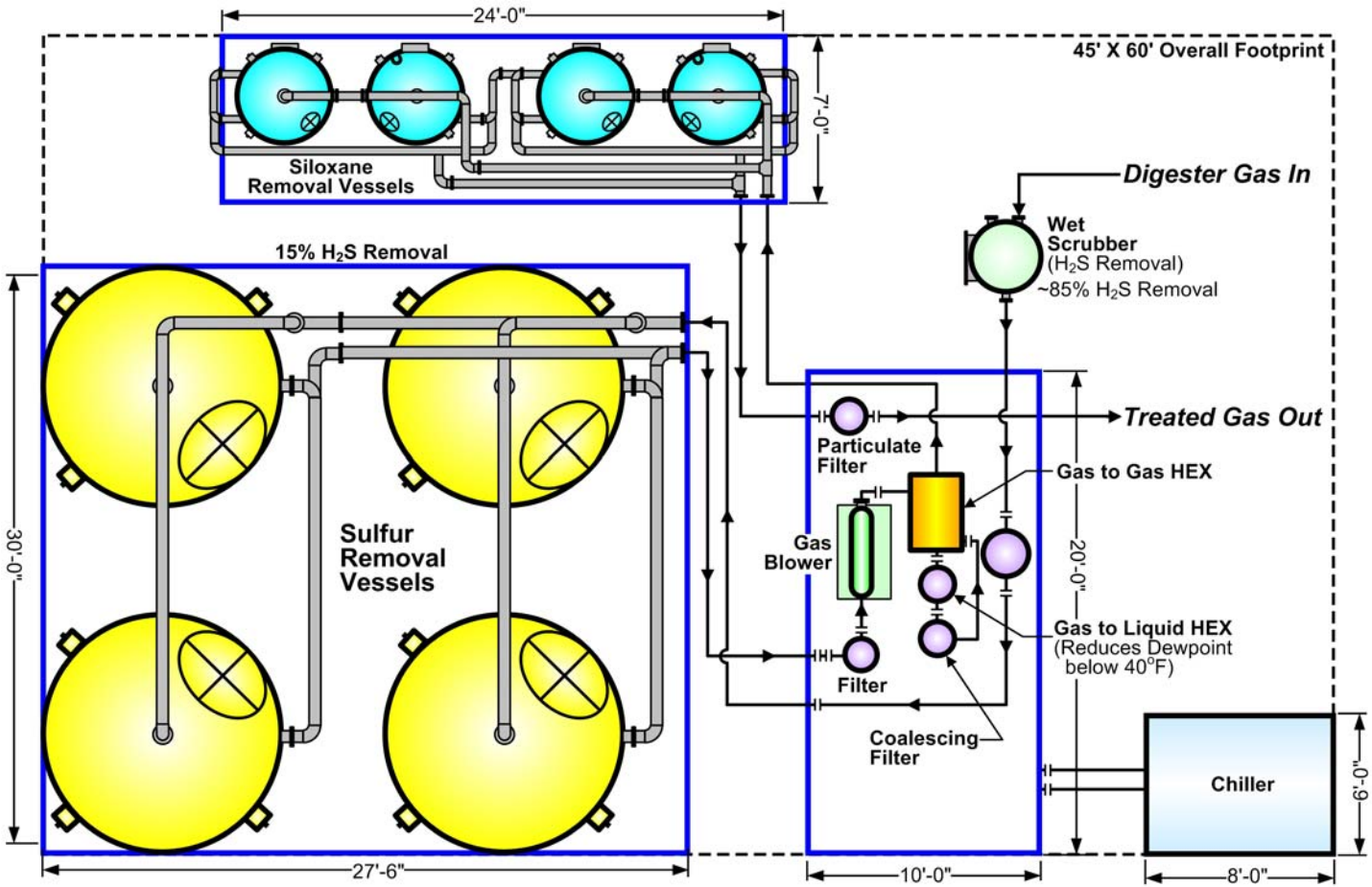

Figure 8. ESC Gas Treatment System Footprint

5.3 Energy Recovery Associates (ERA)

The gas treatment system proposed by ERA includes a demister knockout pot to remove dust and some water vapor, Eco-Tec's BgPur™ liquid scrubbing process to remove H_2S, and Green Energy Solution's pressure swing absorption (PSA) siloxane removal system. A schematic of the gas treatment package by ERA is illustrated in Figure 9.

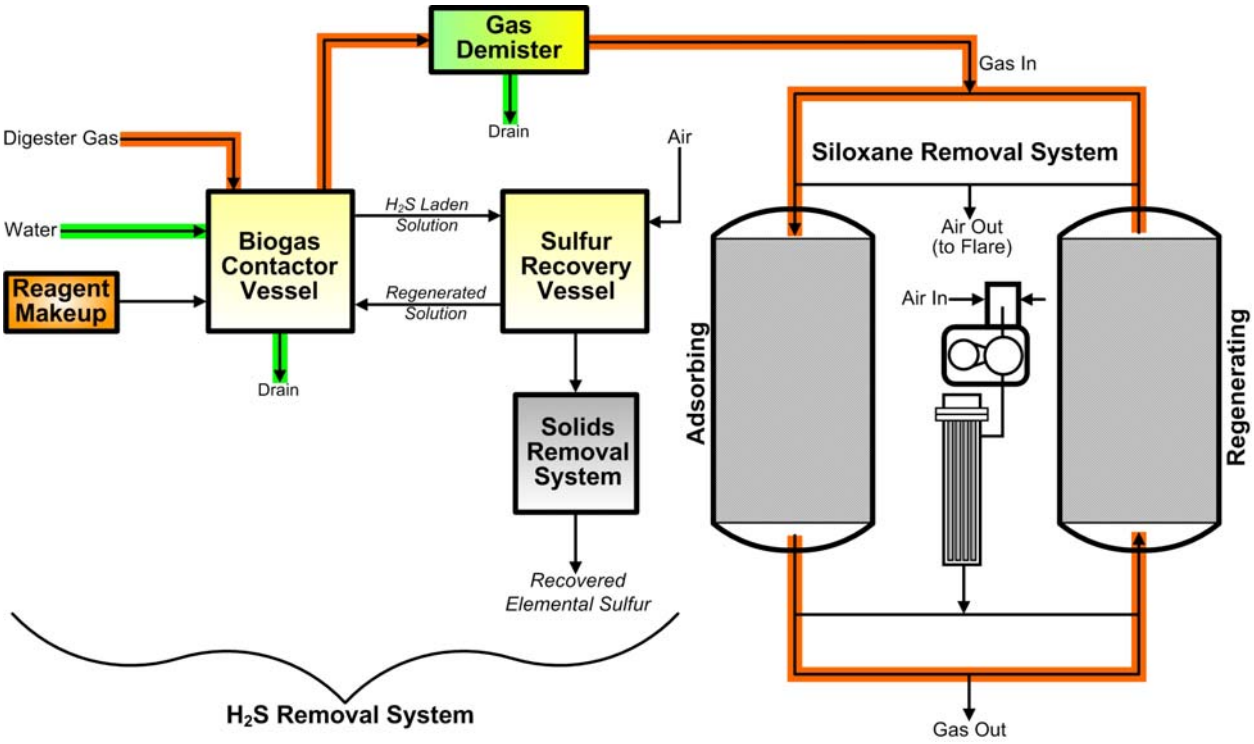

Figure 9. ERA Gas Treatment System

H_2S Removal

The H_2S removal system consists of a two-tank arrangement, each containing Eco-Tec's proprietary chemicals. In the first vessel, digester gas is contacted with an absorption solution to remove hydrogen sulfide from the gas stream. Make-up chemicals are fed automatically to the solution as required based on pH control. Solution containing hydrogen sulfide from the contactor overflows to the air contactor vessel, where H_2S is converted into elemental sulfur. The regenerated solution is recycled to the gas contactor, while the sulfur slurry is taken to a filter press for dewatering. A pump feeds the sulfur slurry to the filter press, and filtrate is returned to the air contactor. The treated gas passes through a knock-out pot to eliminate any entrained droplets and is sent to the siloxane removal system.

Siloxane Removal

The siloxane removal system consists of a twin tower regenerating adsorption system comprised of a specialized blend of adsorption media. The gas stream is directed through one of the two vessels where the siloxanes are adsorbed by the media, while the other vessel regenerates offline. The collected siloxanes are exhausted to a flare or thermal oxidizer. Depending on the inlet concentration of siloxanes, each tank can be online for 24 to 72 hours. Regeneration of the media is achieved using a blower and electric heater and takes approximately 12 hours. This switching of tanks occurs automatically and continuously on an adjustable cycle to provide continuous siloxane removal with no interruption of the gas stream.

5.4 Gas Treatment System Comparison

A comparison of the three proposed digester gas treatment systems based on the information obtained from the suppliers is presented in Table 11.

Table 11. Gas Treatment System Comparison

Contaminant	AFT	ERA	ESC
H_2S Removal System	**Liquid Scrubber**	**Liquid Scrubber**	**Wet Scrubber + Iron Sponge**
	Advantages ▪ No media replacement – liquid chemicals replenished continuously ▪ Lower pressure losses through the system Disadvantages ▪ Slightly more complex than the iron sponge system ▪ Larger footprint ▪ Additional chemical handling ▪ Elemental sulfur recovered from the process has to be disposed of by PCRWRD		Advantages ▪ Smaller footprint ▪ Comparatively simpler operation Disadvantages ▪ Acidic sidestream from wet scrubber ▪ Higher pressure losses ▪ Media to be replaced once a year

Table 11. Gas Treatment System Comparison (Cont'd)

Contaminant	AFT	ERA	ESC
Moisture Removal System	**Chilling/Reheating**	**Removed in Siloxane Scrubber**	**Chilling/Reheating**
	Advantages Moisture removal efficiency clearly defined Disadvantages Additional equipment compared to ERA system	Advantages No separate moisture removal step Disadvantages Difficult to define moisture removal efficiency	Advantages Moisture removal efficiency clearly defined Disadvantages Additional equipment compared to ERA system
Siloxane Removal System	**Granular Media**	**Regenerable Media – PSA Process**	**Granular Media**
	Advantages ▪ Simpler operation compared to ERA system Disadvantages ▪ Proprietary media ▪ Media to be replaced once a year	Advantages ▪ Media is continuously regenerated - longer media life Disadvantages ▪ Slightly more complex operation ▪ Air stream containing siloxanes released during regeneration has to be flared	Advantages ▪ Activated Carbon – readily available media ▪ Simpler operation compared to ERA system Disadvantages ▪ Media to be replaced once a year

6.0 OPINION OF COSTS FOR THE DIGESTER GAS TREATMENT ALTERNATIVES

Budget level capital and operations and maintenance (O&M) costs were developed for the three gas treatment options using the conceptual design criteria presented in Table 9 and Table 10, and the system supplier's recommendations. Life cycle costs are based on a 20 year project life, using an interest rate of 5.0 percent. The equivalent annual costs are presented in 2009 dollars.

The digester gas treatment system will be sized for 2030 (ultimate design) digester gas flow of 900 standard cubic feet per minute (scfm) and will consist of hydrogen sulfide, moisture, and siloxane removal. The gas treatment systems can handle the higher flows associated with maximum month operating conditions, but the media replacement frequency will increase under prolonged higher flow rates.

6.1 Capital Costs

Estimated capital costs for the three alternative treatment systems include the costs for contractor mobilization, site work, facilities, equipment and equipment installation. A summary of the opinion of capital costs for the gas cleaning systems is presented in Table 12.

Table 12. Opinion of Costs for Digester Gas Treatment Systems

Capital Cost Items	AFT	ESC	ERA
General Requirements	$78,000	$105,000	$10,000
Site Work	$59,000	$100,000	$59,000
Gas Cleaning System[1]	$984,000	$1,947,000	$0[2]
Installation Costs	$197,000	$389,000	$0[2]
Electrical and Instrumentation	$59,000	$100,000	$59,000
Contingencies	$260,000	$380,000	$75,000
Total Probable Construction Costs	***$1,637,000***	***$3,021,000***	***$203,000***
Engineering, Legal & Administration	$234,000	$316,000	$50,000
Total Probable Project Costs	***$1,871,000***	***$3,337,000***	***$253,000***

[1] *Includes H_2S, moisture, and siloxane removal systems*
[2] *ERA's business model is explained under Section 6.3*

The various line items presented in Table 12 include the following:

- General requirements include the costs for mobilization, temporary utilities, equipment rental, and supervision.
- Site work covers the costs for yard piping, which includes digester gas piping to and from the gas cleaning system, waste drain piping, and process water piping. Also included under site work are estimated costs for earthwork, asphalt pavement and landscaping.
- Gas treatment system costs shown in the table include the H_2S, moisture, and siloxane removal systems and other ancillary equipment. The costs for the treatment systems were obtained from the manufacturers. Equipment installation costs are listed as a separate item. The costs for the digester gas flare required to treat the off-gases from the siloxane media regeneration system for ERA were not included in the costs since it was assumed that the gases could be diverted to the existing flare.
- The instrumentation and control (I&C) systems for the gas cleaning equipment, and electrical connections to the equipment are included under electrical and instrumentation.

6.2 Annual Operations and Maintenance Costs

The annual operating costs used to develop the overall life cycle costs for the three alternatives were based on the average digester gas production at 2014 (interim) conditions. The unit costs used to develop the annual operating costs are listed in Table 13. The annual operating costs for the three gas treatment alternatives are summarized in Table 14.

Table 13. Unit Cost Summary

Item	Unit Cost
Power	0.087/kWh
Labor	
Operator	$35/hr (incl. benefits)
Maintenance Technician	$35/hr (incl. benefits)
Equipment Maintenance	2% of equipment cost

Table 14. Annual Operating Costs for the Gas Treatment Systems

Annual Operating Costs	AFT	ESC	ERA[1]
Electricity	$24,000	$62,000	--
Labor (Operations & Maintenance)	$42,000	$29,000	--
Maintenance (Materials)	$20,000	$39,000	--
Media Replacement & Disposal	$146,000	$233,000	--
Total Annual Costs	***$232,000***	***$363,000***	--
Present Worth of O&M Costs[2,3]	***$3,348,000***	***$5,239,000***	--

[1] *ERA's business model is explained under Section 6.3*

[2] *Based on a 20-year study period at an interest rate of 5%*

[3] *Includes 2% escalation*

The operating costs include the following items:

- Electricity use by the gas cleaning equipment. The electricity requirements for the ESC system are considerably higher than the AFT system because of the intermediate pressure boosting step. With the granular media scrubbers used by ESC for H_2S removal, there is a possibility that the media may be coated with elemental sulfur, resulting in a higher pressure drop through the system. If the pressure drop through the gas cleaning process exceeds 10 psig, an intermediate pressure boosting step will be required to maintain the gas pressure at the engine generators. For purposes of this evaluation, it was assumed that the gas booster will be operating continuously.
- Operations labor was based on 32 hours (1.5 hours per shift) of operator time for the AFT system and 21 hours (1 hour per shift) of operator time for the ESC system. The higher labor requirement for the AFT system was based on the additional dewatering step associated with H_2S removal process. Maintenance labor was based on 5 hours per week for the AFT system and 4 hours per week for the ESC system.
- The media replacement costs for the AFT system include the costs for H_2S removal chemicals and siloxanes removal media, and removal and disposal of spent siloxanes media, including labor. The sulfur cake generated during the H_2S removal process must be disposed of by PCRWRD and this has not been accounted for in the costs. The media replacement costs for the ESC system include media costs for H_2S and siloxane scrubbers, and removal and disposal of spent H_2S and siloxanes media, including labor.

6.3 ERA's Business Model

ERA's business model offers the cleaning equipment at no capital cost to the county, but with a user's fee for gas processed. ERA owns the equipment and offers a gas conditioning service contract for a term of 10 years, with option for two 5-year renewals with consent of both parties. This model takes the gas cleaning equipment away from being a capital item to an operating cost item.

For the Ina Road WRF, ERA has proposed a service fee of $1.99 per 1,000 standard cubic feet (scf) of digester gas processed based on a gas flow of 460 scfm. 50 percent of the service fee is fixed and is payable monthly regardless of the amount of gas processed. The remaining 50 percent of the "base payment" is variable based on the amount of gas processed. The variable portion of the payment is subject to annual escalation in accordance with the Producer Price Index and no reductions below the initial price will be calculated. ERA's business model is summarized in Table 15.

Table 15. ERA Business Model

Parameter	**Cost Model (Based on 460 scfm Flow)**			
Digester Gas Flow, *scfm*	340		460	
$/1,000 scfm of Gas	$1.99		$1.99	
Contract Term, *years*	10 + 5 + 5		10 + 5 + 5	
Payment Type	***50% Fixed***	***50% Variable***	***50% Fixed***	***50% Variable***
$/1,000 scfm of Gas	$0.995	$0.995	$0.995	$0.995
Monthly Payments	$14,610	$14,610	$14,610	$19,770
Present Worth of Fixed Payments[1]	***$2,184,800***	--	***$2,184,800***	--
Present Worth of Variable Payments[1]	--	$2,185,000	--	$2,956,000
Annual Escalation Factor[2]		2%		2%
Present Worth of Escalation		$345,000		$467,000
Total Present Worth of Variable Payments		***$2,530,000***		***$3,423,000***
Total Present Worth		***$4,715,000***		***$5,607,000***

[1] *Based on a 20-year study period at an interest rate of 5%*
[2] *Assumed escalation factor*

The total present worth costs for the three gas treatment alternatives are presented in Table 16. The present worth cost is an economic parameter used to estimate the total monetary value of the facilities. Present worth is the equivalent amount of money that must be invested at a given interest rate at the start of a project to provide all funds necessary to construct, operate and maintain the required facilities and equipment throughout the design life of the project. The total present worth of an alternative includes capital costs, present worth of the annual operations and maintenance (O&M) costs, and the present worth of any remaining value.

Table 16. Total Present Worth and Annualized Unit Costs for Gas Treatment Alternatives

Parameter	AFT	ESC	ERA
Probable Capital Costs	$1,871,000	$3,337,000	$253,000
Present Worth of Annual O&M[1]	$3,348,000	$5,239,000	$5,607,000
Total Present Worth Costs	***$5,218,000***	***$8,579,000***	***$5,860,000***
Annualized Present Worth Costs	$419,000	$688,000	$470,000
Annualized Unit Costs ($/10^3 scf)	***$1.73***	***$2.85***	***$1.95***

[1] *Based on a 20-year study period at an interest rate of 5%*

7.0 NON-ECONOMIC CONSIDERATIONS

The following non-economic criteria were used to evaluate the three gas treatment alternatives. Non-economic criteria are less definitive and more subjective than economic criteria, but are also important considerations in the overall evaluation process.

7.1 Experience

This criterion was used as an indicator of an alternative's overall reliability and performance. All three gas treatment systems considered have multiple operating installations, but many of the applications are on landfill gas. A gas treatment system that has more operational experience on digester gas was given a more favorable rating. The advantages of operational experience include: better defined costs and known operational issues such as maintenance requirements and sidestream characteristics. Reference lists for the three suppliers are attached in Appendix C**.**

7.2 Performance

The performance requirements for the three gas treatment systems were established based on the contaminant target limits for the engine generators. All three systems appear technically feasible, and all three systems are expected to meet the required gas quality requirements for use in engine generators.

7.3 Complexity

System complexity impacts the skill level required for operations and maintenance staff. Complex systems generally require a high level of operator attention and maintenance. More complex systems may be more susceptible to downtime, which can impact reliability.

7.4 Expandability

A system that could be expanded to accommodate future design flows without additional equipment was considered more favorable than systems that required new equipment for capacity augmentation. Addition of new facilities in the future will require piping modifications to redirect the gas through the new equipment which can cause interruptions to cleaning operations.

Table 17 summarizes the non-economic criteria used to evaluate the alternatives and the relative rankings assigned to the various cleaning options based on the above discussion. A plus sign designates a positive rating for that parameter, a zero indicates a neutral rating, and a negative sign indicates a negative rating.

Table 17. Non-Economic Evaluation of Gas Treatment Alternatives

Parameter	AFT	ESC	ERA
Proven Performance/Experience	+	0	0
Performance	+	+	+
Complexity	0	+	0
Expandability	+	-	-
Totals =	**+3**	**+1**	**0**

8.0 ALTERNATIVES AND RECOMMENDATIONS

Based on the results of the economic evaluation, the gas treatment system by AFT has the lowest present worth costs. AFT also has the most digester gas cleaning experience among the three suppliers. The AFT system is expandable from current flows to 2030 (ultimate design) flows by adding more media to the scrubbers and does not require any additional equipment. In comparison, the gas treatment systems supplied by ESC and ERA require additional equipment past the 2014 (interim) conditions to handle the design flows. The ESC system does not use any proprietary chemicals and the media used in the H_2S and siloxane scrubbers may be available from multiple suppliers. However, the solids media used for H_2S removal results in higher pressure drops through the system, requiring an intermediate pressure boosting step. ESC also offers a liquid scrubber as an alternative to the dry media scrubbers for H_2S removal.

ERA offers a different business model whereby the gas cleaning equipment is offered at no cost to the county, but with a user's fee for gas processed. ERA owns the equipment and offers a gas conditioning service contract for a term of 10 years, with option for two 5-year renewals with consent of both the parties. This model takes the gas cleaning equipment away from being a capital item to an operating cost item. However, in discussions with ERA, they are willing to also offer equipment as a system supplier, with a process guarantee, and with installation by a contractor.

Each system supplier was invited to present their recommended digester gas treatment system to PCRWRD to allow plant staff to review the detailed equipment packages and ask for further clarification if needed. During this process, ERA indicated that their proposed hydrogen sulfide removal system was designed to receive the digester gas at atmospheric (ambient) pressure, and could not accept the design digester gas pressure of 30 psig. This information is contrary to the information ERA provided to B&V during the preliminary design work to develop this Concept Design report. During subsequent follow-up by B&V with ERA, ERA reiterated that their proposed H2S removal system could not be used with the design gas pressure of 30 psig. Therefore, ERA is no longer considered a viable option and will not be included in the detailed design.

The following recommendations will be incorporated into the final design documents:

- Final contract documents will be developed for a traditional design / bid / build project approach

- Performance-based procurement specifications will be provided for the gas treatment systems proposed by AFT and ECS
- A Service Maintenance Agreement will be included in the bid documents. The Agreement will be for 3 years with a 2 year renewal option

9.0 ELECTRICAL AND CONTROLS

Each of the three gas treatment system suppliers were contacted and asked to provide the electrical and control requirements for the equipment they are proposing. In addition, the existing electrical power distribution and control systems at the Ina Rd WRF were reviewed.

9.1 Electrical Power Distribution

The Ina Rd WRF has two separate independent power distribution systems on the site. The first system is a 13.8 kV utility service from Tucson Electric Power (TEP). The second is a 4.16 kV system generated on site using the digester gas generators. The location of the 4.16 kV distribution system encompasses the area where the new gas cleaning system will be located and therefore would be the source of power to the new gas cleaning equipment. Figure 10 is a one-line diagram of the generator switchgear lineup and major equipment associated.

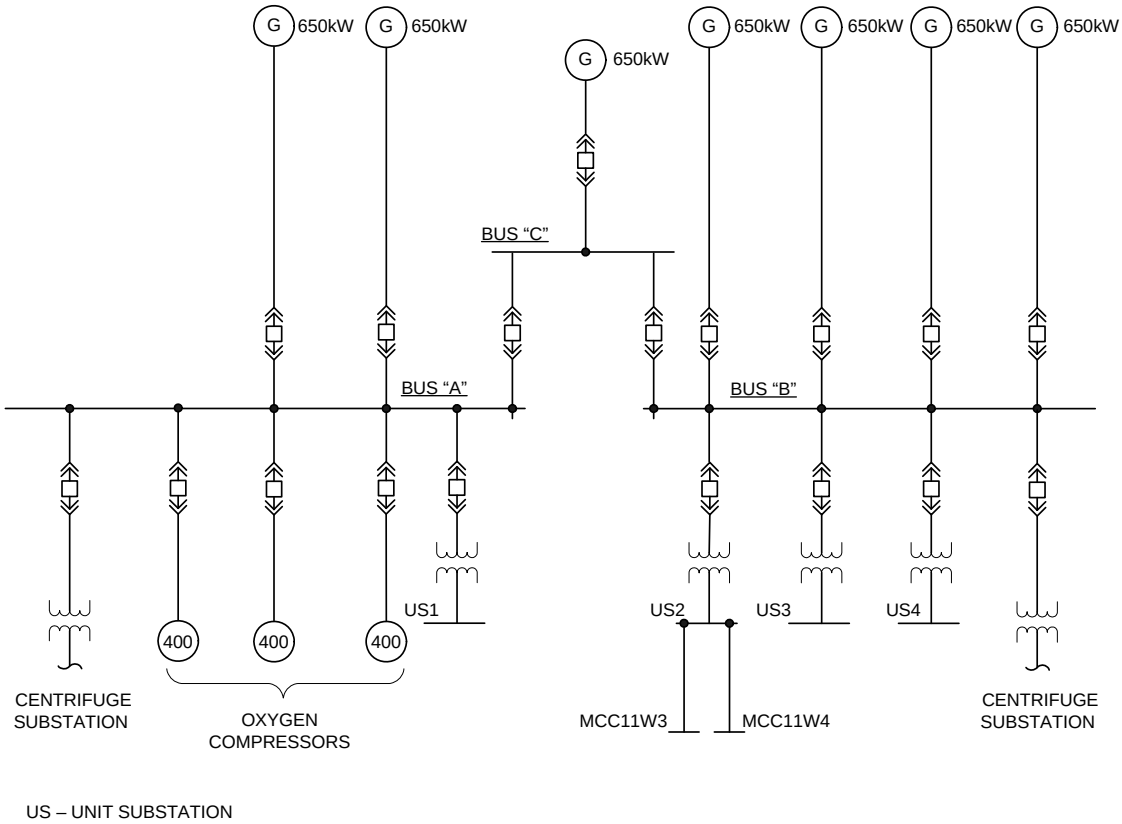

Figure 10. Generator Switchgear One-Line Diagram

Preliminary review of the each supplier's proposed equipment indicates the worst-case new electrical loads to be 100-150 kW at 480 volt. Although the exact location of the new gas cleaning equipment has not been finalized, the existing 480 volt Unit Substation No. 2 is centrally located amongst the various locations being proposed and spare space has been identified within the substation switchgear. Additionally, if a location to the north or west of the existing digesters is selected, there is also space available within either MCC11W3 or MCC11W4, also at 480 volt. It should be noted that identification of all existing loads on this equipment will need to be provided in order to complete load calculations to confirm there is adequate spare capacity for the new equipment.

9.2 Control System

The existing control system at the Ina Rd WRF consists of local programmable logic controllers (PLC) and human machine interface (HMI) workstations throughout the plant, all networked via Ethernet over fiber. The preferred PLCs being used by the County are Allen-Bradley ControlLogix with Ethernet IP communication. Each of the approved suppliers is proposing one or more PLCs and are agreeable to using the preferred PLC with Ethernet IP capability within their system.

Preliminary review of the existing control system network and location of PLCs in relation to the different proposed gas cleaning equipment sites indicate that the best location to tie into the network will be at Digester Building PLC11, just east of the Digester Control Room. Figure 11 identifies the requirements for interface with the controls system and one scenario of the required control system hardware requirements.

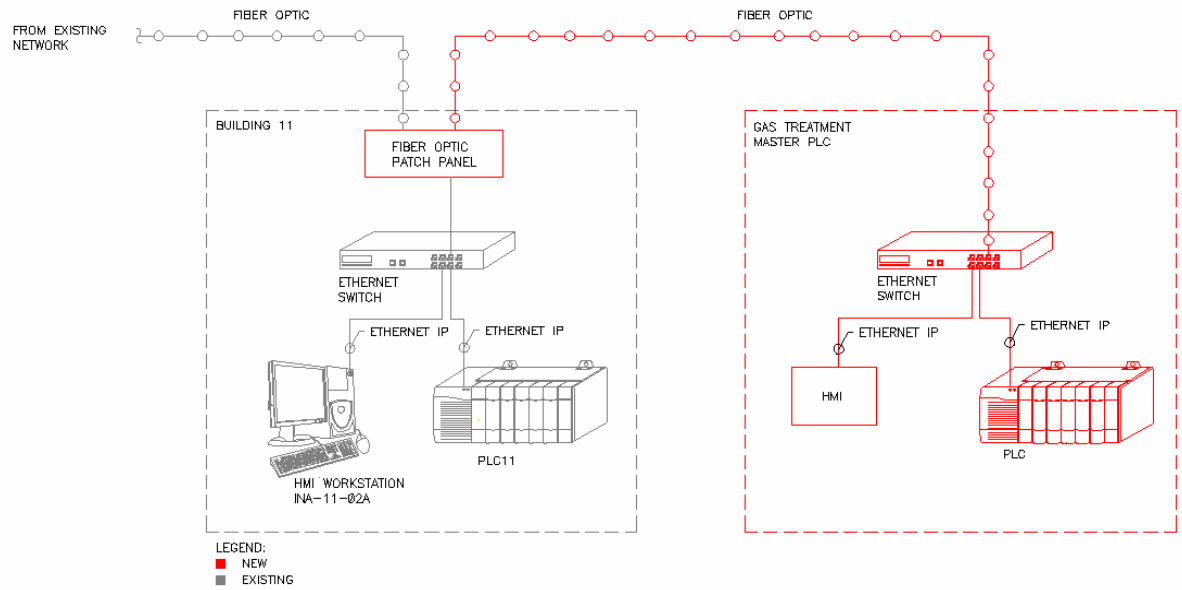

Figure 11. Partial Control System Network Diagram

10.0 SITE LOCATION FOR DIGESTER GAS TREATMENT FACILITIES

Figure 12 is a site drawing of the Ina Road WRF, showing an area of the plant around the digesters and Energy Recovery Building. The existing digesters, Existing Digester Control Building, and Energy Recovery Building are shown in yellow. The new digester and New Digester Control Building under design are shown in solid green. Future digesters are shown in shaded green. The site plan also shows future facilities on the plant site in order to project available areas to locate new facilities. The projected location of the New Energy Recovery Building is shown in blue, to the north-east of the existing facility. Two potential locations for the new Digester Gas Treatment Facilities are shown in orange color near the existing Energy Recovery Building. The preliminary location to tie into for power and control facilities is also shown in orange color. Figures 13 and 14 show the preliminary equipment layout for the gas treatment systems proposed by AFT and ESC, respectively. The detailed design phase will make final consideration of the two potential locations for digester gas treatment, and proceed with the preferred location.

PLANT NORTH

60' 30' 0 60' 120'

1"=60'

FACILITY LEGEND

NO.	EXISTING FACILITY
7	SECONDARY CLARIFIERS/RAS PUMP STATION
8	SLUDGE THICKENERS/CONTROL BUILDING
9	SOLIDS THICKENING BUILDING
10	SLUDGE DIGESTERS
11	DIGESTER CONTROL BUILDING
14	ENERGY RECOVERY BUILDING
16	TRAINING CENTER
18	DOMESTIC WELL
23	CENTRIFUGE FACILITY
24	PROPANE TANK
35	ANOXIC/AERATION BASIN

NO.	NEW FACILITY (BY OTHERS)
49	BIOREACTOR BASIN
50	SECONDARY CLARIFIER FACILITY-WEST
52	CHLORINE CONTACT BASINS
58	WAS THICKENING FACILITY
60	ANEROBIC DIGESTION FACILITY
70	SLUDGE STORAGE TANKS/PUMP STATION

NO.	NEW FACILITY
80	GAS SCRUBBING EQUIPMENT (PROPOSED LOCATIONS)

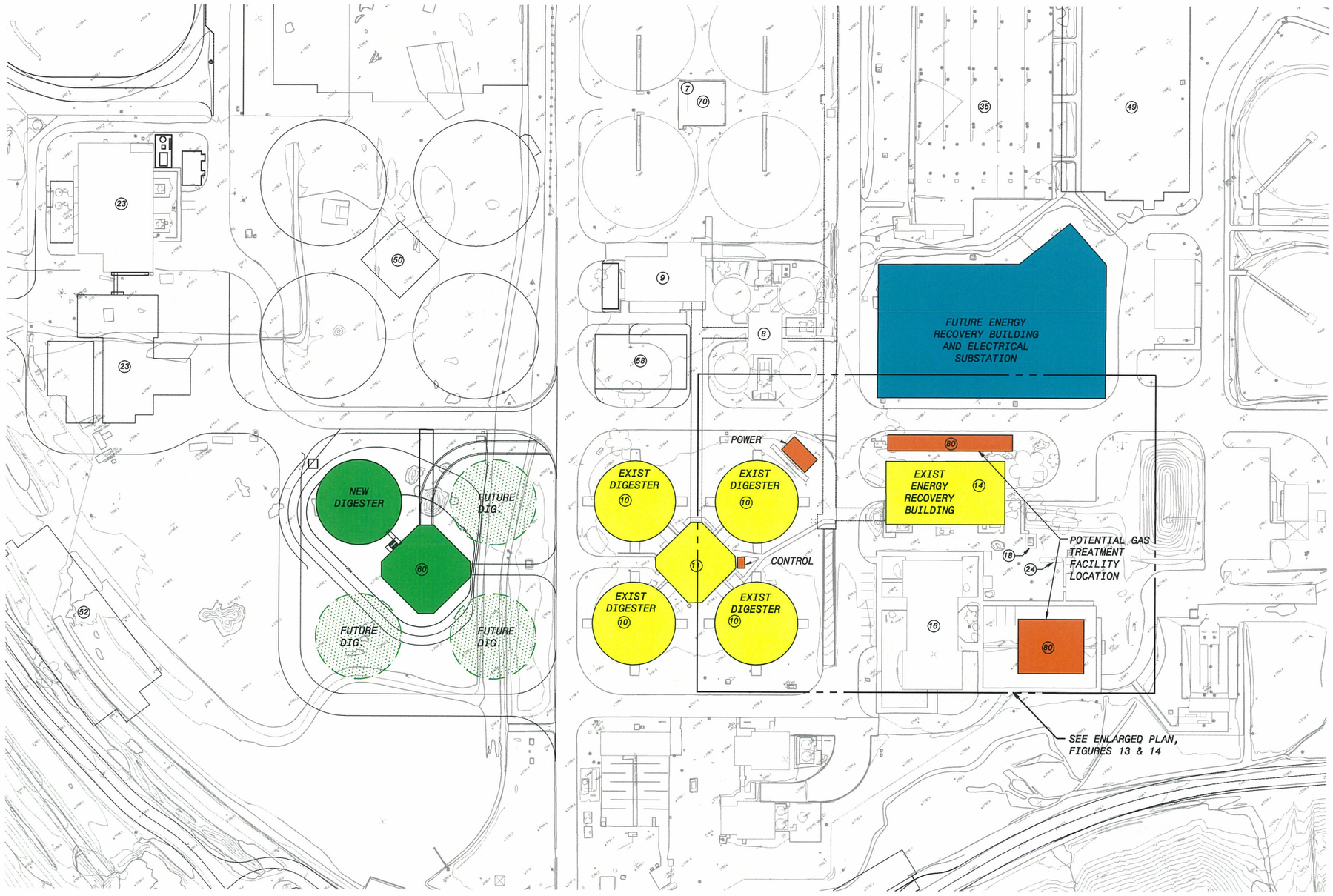

SITE PLAN
1"=60'

DATE	REVISIONS AND RECORD OF ISSUE	NO.	BY	CK	APP
CYGNET ID: 163723-2000-C-B00000000Y	XREF1 ID:				
SAVED: C0008328, 4/15/2009 4:40:19 PM	XREF2 ID:				
DWG VER #: 1.2	XREF3 ID:				
PLOTTED: C0008328, 4/15/2009 4:55:27 PM	XREF4 ID:				
USER: C0008328	XREF5 ID:				
DWG: Fig-1.dwg					

BLACK & VEATCH
Corporation
Kansas City, Missouri

PIMA COUNTY
INA ROAD WATER RECLAMATION FACILITY

GAS TREATMENT SYSTEM
LAYOUT OPTIONS
FIGURE 12

DESIGNED:
DETAILED:
CHECKED:
APPROVED:
DATE:

PROJECT NO.
163723

SHEET 1 OF 1

F05000
D5000

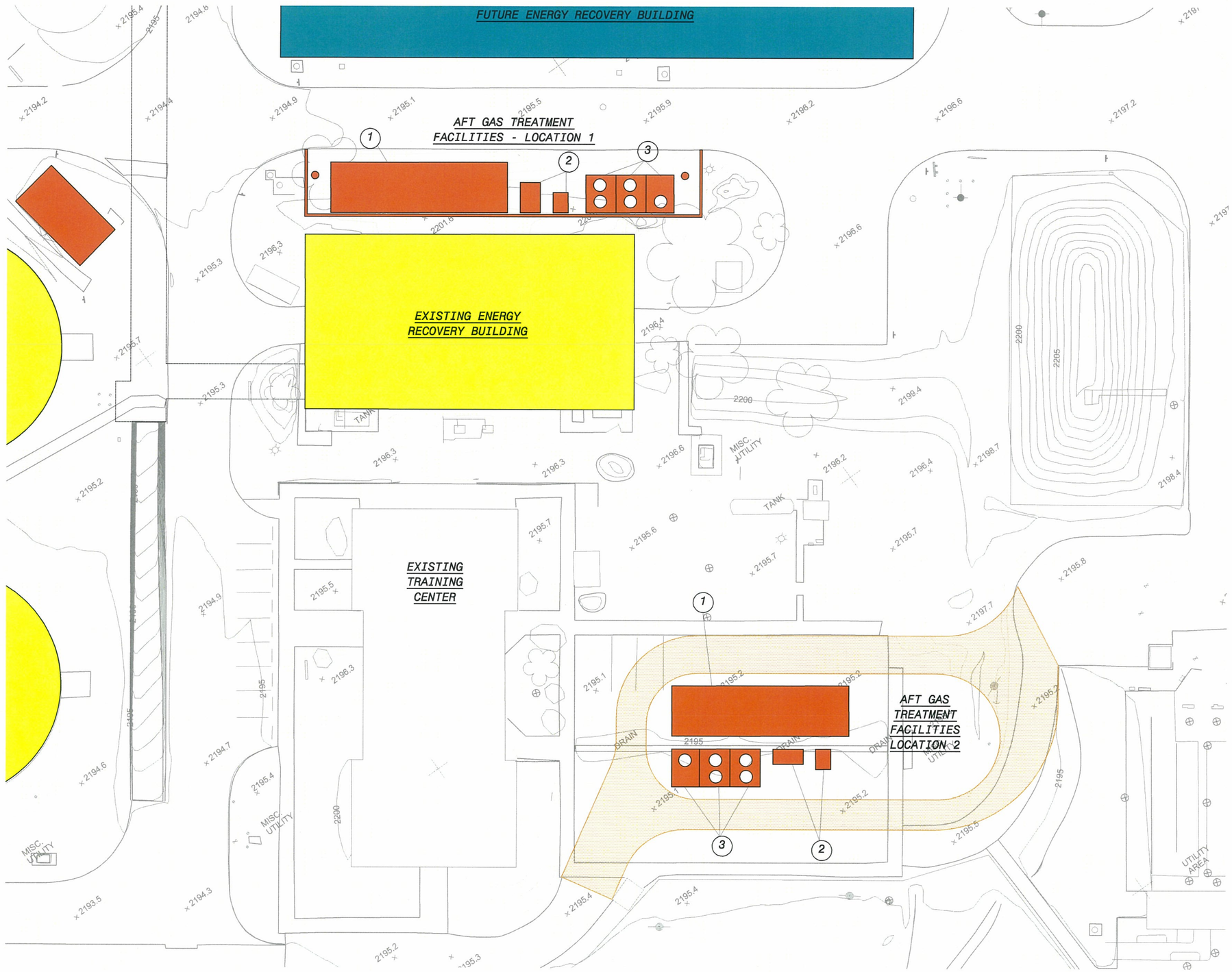

PLANT NORTH

20' 10' 0 20' 40'
1"=20'

1. HYDROGEN SULFIDE REMOVAL
2. MOISTURE REMOVAL
3. SILOXANE REMOVAL

SITE PLAN
1"=20'

DATE	REVISIONS AND RECORD OF ISSUE	NO.	BY	CK	APP
CYGNET ID: 163723-3000-WTUP-C-B0000001F	XREF1 ID:				
SAVED: C0008328, 4/15/2009 5:00:19 PM	XREF2 ID:				
DWG VER #: 1.0	XREF3 ID:				
PLOTTED: C0008328, 4/15/2009 5:04:48 PM	XREF4 ID:				
USER: C0008328	XREF5 ID:				
	SW: Fig-2.dwg				

BLACK & VEATCH Corporation
Kansas City, Missouri

PIMA COUNTY
INA ROAD WATER RECLAMATION FACILITY

GAS TREATMENT SYSTEM
LAYOUT OPTIONS - AFT
FIGURE 13

DESIGNED:
DETAILED:
CHECKED:
APPROVED:
DATE:

PROJECT NO.
163723

SHEET 1 OF 1

F05000
D5000

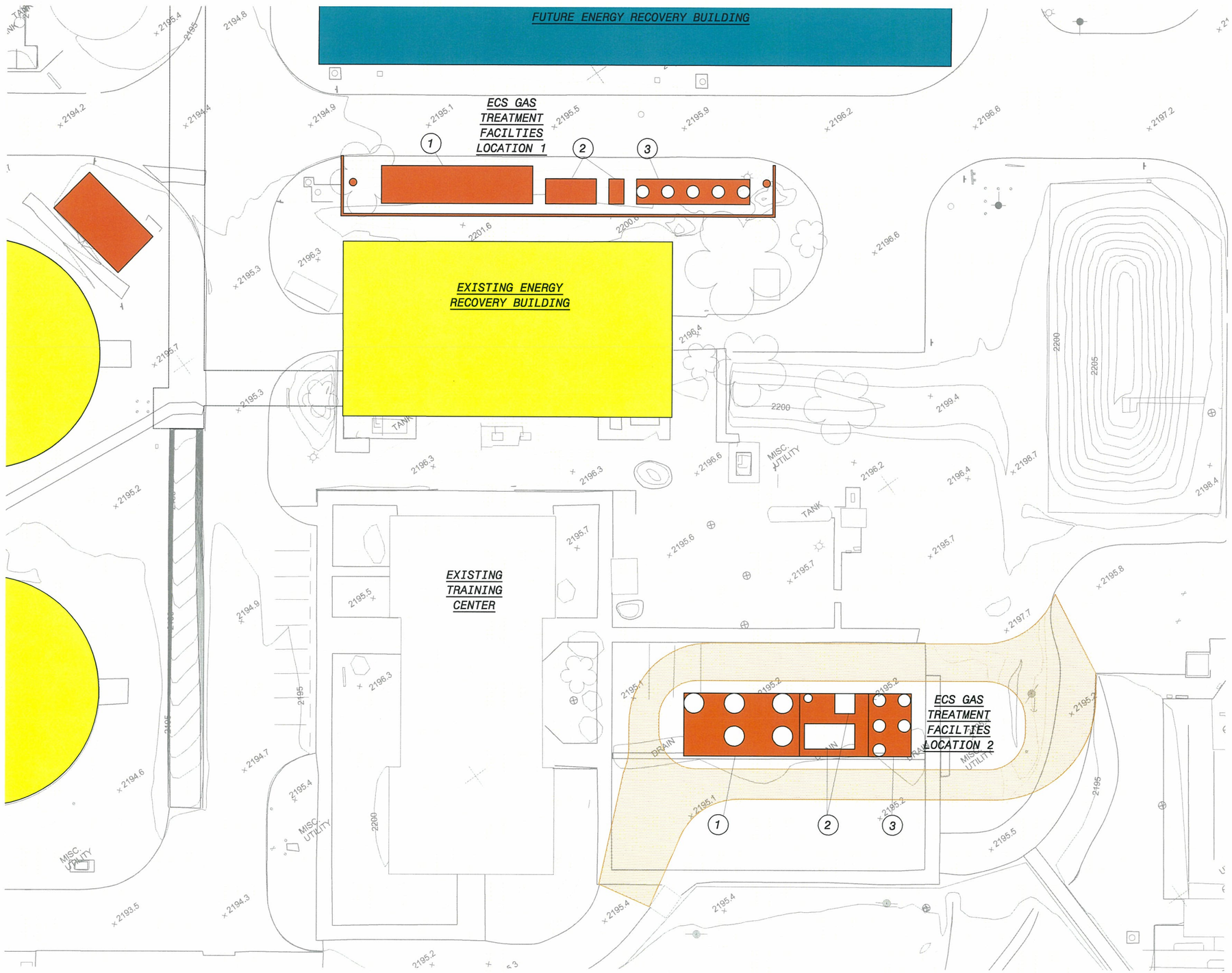

SITE PLAN
1"=20'

NO.	BY	CK	APP

REVISIONS AND RECORD OF ISSUE

DATE

CYGNET ID: 163723-2000-C-B000000001 XREF1 ID:
SAVED: C0008328, 4/15/2009 4:51:03 PM XREF2 ID:
DWG VER #: 1.2 XREF3 ID:
PLOTTED: C0008328, 4/15/2009 5:02:58 PM XREF4 ID:
USER: C0008328 STY: Fig-3.dwg XREF5 ID:

BLACK & VEATCH Corporation
Kansas City, Missouri

PIMA COUNTY
INA ROAD WATER RECLAMATION FACILITY

GAS TREATMENT SYSTEM
LAYOUT OPTIONS - ECS
FIGURE 14

DESIGNED:
DETAILED:
CHECKED:
APPROVED:
DATE:

PROJECT NO.
163723

SHEET 1 OF 1

FD5000
D5000