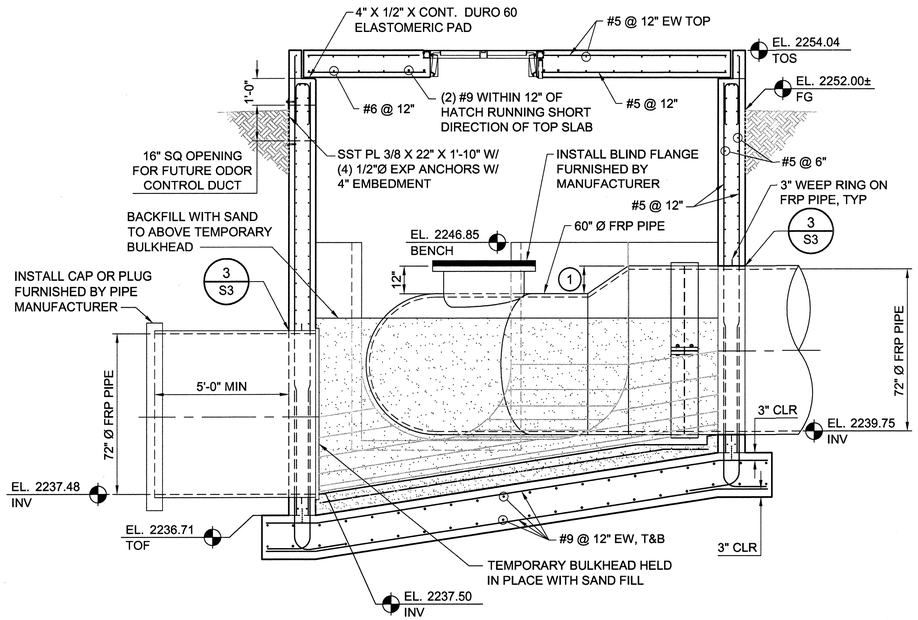

LONGITUDINAL

SECTION 1 / S22

SCALE: 3/8" = 1'-0"

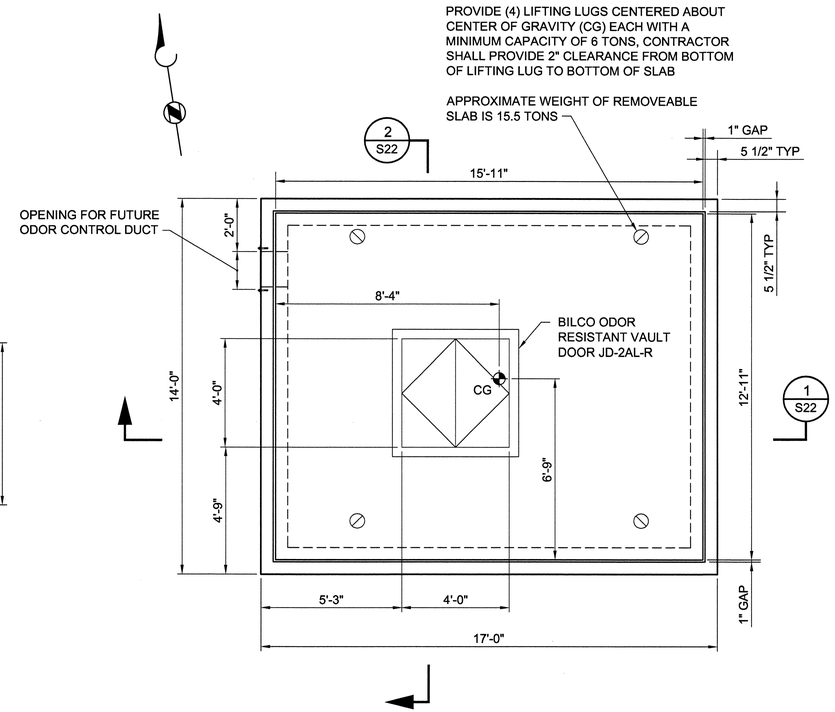

TOP

PLAN

SCALE: 3/8" = 1'-0"

GENERAL NOTE:

1. COAT STRUCTURE INTERIOR SURFACES PER REQUIREMENTS FOR ORIGINAL CONTRACT DOCUMENTS.

KEY NOTES:

1. REDUCER AND 90° BEND DIMENSIONS PER APPROVED SUBMITTAL FROM HOBAS
2. HOBAS CLOSURE COUPLINGS

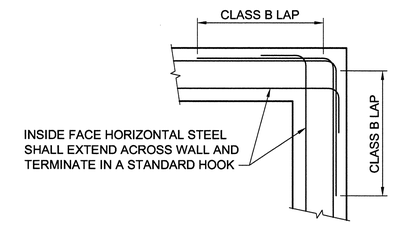

CORNER REINFORCEMENT

DETAIL A / S22

SCALE: 3/4" = 1'-0"

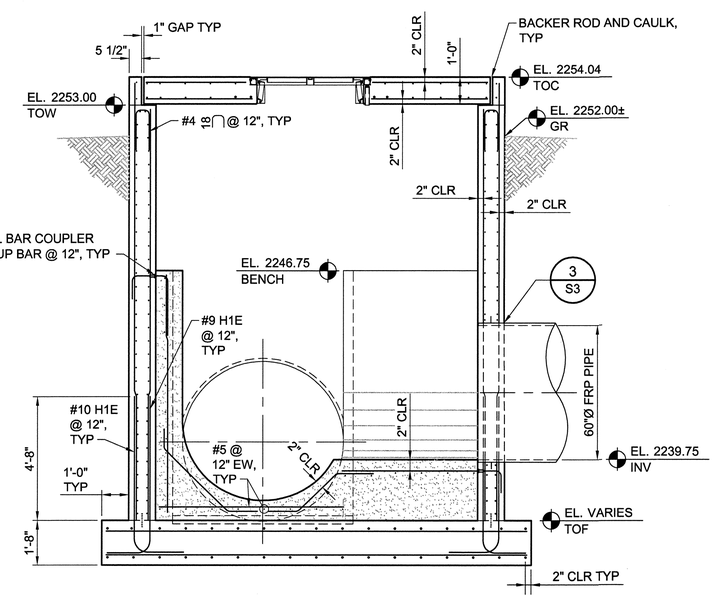

NOTE:
FRP FABRICATION NOT SHOWN IN THIS VIEW FOR CLARITY.

TRANSVERSE

SECTION 2 / S22

SCALE: 3/8" = 1'-0"

NOTE:
MANUFACTURER TO PROVIDE TWO LIFTING EYES FOR REMOVAL OF TEMPORARY FRP FABRICATION. LIFTING EYES SHALL BE LOCATED TO BALANCE FABRICATION AND BE CAPABLE OF LIFTING FABRICATION WHEN HALF FULL OF WATER.

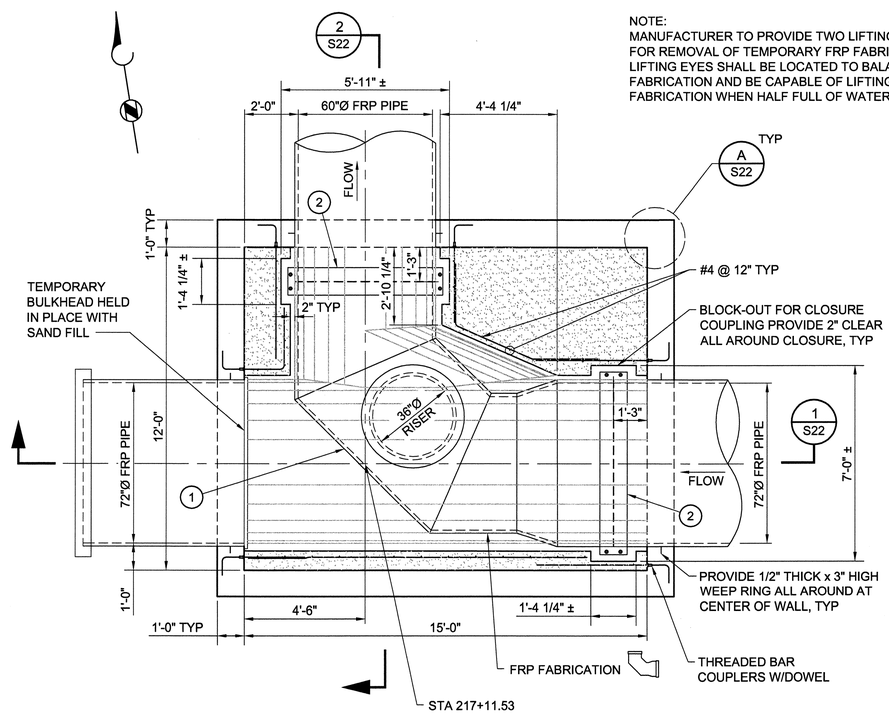

BOTTOM

PLAN

SCALE: 3/8" = 1'-0"

BROWN AND CALDWELL
Tucson, Arizona

NO.	REVISION	APPV'D.	DATE
1	AMENDMENT	JLN	1/10

DESIGNED BY: RDT
DRAWN BY: RAC
CHKD BY DESIGNER: RLA
CHKD BY FIELD ENGR.:
FIELD BOOK NO.:

Registered Professional Engineer (Structural) CERTIFICATE NO. 12391 RANDOLPH D. TROYER Date Signed 6-23-10 ARIZONA U.S.A. Expires 9/30/10

PIMA COUNTY
REGIONAL WASTEWATER RECLAMATION DEPARTMENT
201 North Stone Avenue • Tucson, Arizona 85701-1207 • Phone: (520) 740-6500

ROGER ROAD WRF TO INA ROAD WRF PLANT INTERCONNECT (SANTA CRUZ INTERCEPTOR – PHASE IV)

DIVERSION STRUCTURE NO. 3
PLANS AND SECTIONS

133888

DATE : JUNE 16, 2010
SCALE : NONE
SHEET NO. : S22
OF

IMAGES:
WORKS: P:\BC - Tucson\133888-STD-Inf- SEAL-SRM, 133888-PCI-Div5Inst\h3, 133888-PCI-Div5Inst\h3, TROYER-AZ-STRUCT, ABLIN
P:\BC - Tucson\133888 - PCWMD Plant Interconnect\Drawings\WW2-sheets\S-STRUCTURAL\133888-S22.dwg, Jun 22, 2010 - 10:16am, ROOX