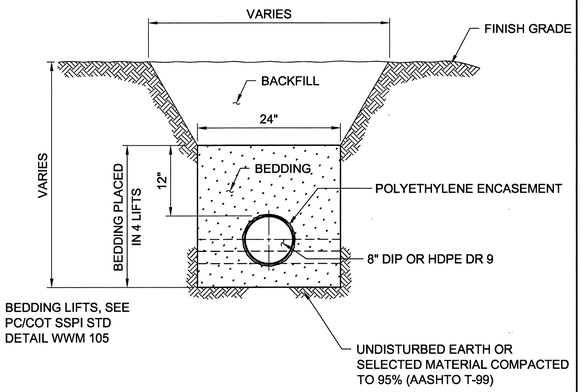

TRENCH DETAIL

DETAIL A / C34

SCALE: NONE

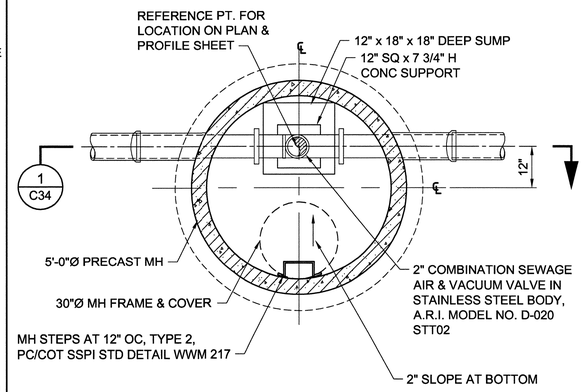

COMBINATION SEWAGE AIR AND VACUUM VALVE CHAMBER DETAIL

DETAIL C / C34

SCALE: NONE

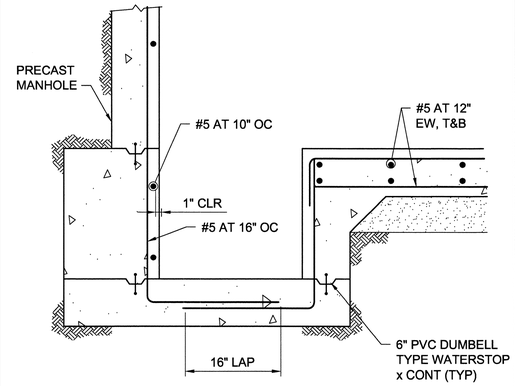

NOTE:

ALL PRECAST MANHOLE CONCRETE SECTIONS SHALL BE INSTALLED ON POURED CONCRETE BASE WITH RAM-NEK SEAL AND GROUT, AS PER PCRWRD STANDARDS, TYPICAL.

DRAIN CHAMBER SUMP DETAIL

DETAIL 1 / C34

SCALE: NONE

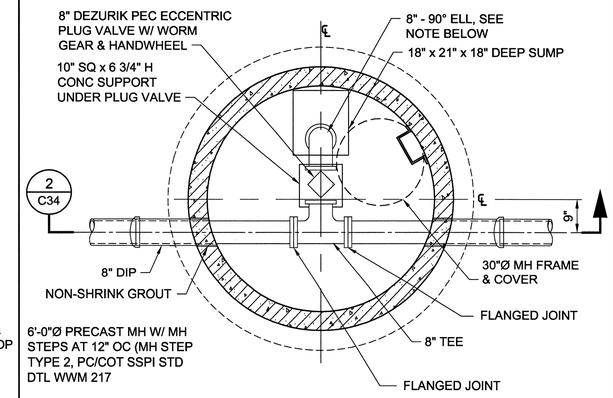

DRAIN CHAMBER DETAIL

DETAIL D / C27

SCALE: NONE

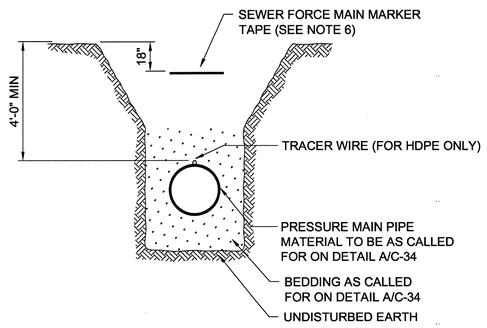

NOTES:

1. A CONTINUOUS MAGNETIC MARKER TAPE APPROVED BY PCRWRD SHALL BE BURIED 18" BELOW GROUND SURFACE AT FINAL GRADE. CONTINUOUS PRINTING ON THE TAPE SHALL STATE: "CAUTION: SEWAGE PRESSURE LINE."
2. INSTALLATION OF ACCEPTABLE PRESSURE PIPE MATERIAL TO BE IN ACCORDANCE WITH CURRENT PCRWRD STANDARDS.
3. THE HORIZONTAL LOCATION OF THE PRESSURE LINE SHALL BE IDENTIFIED BY A PERMANENT MARKER PER WWM 224.
4. THE TRACER WIRE SHALL BE #14 GAUGE SOLID COPPER WIRE WITH 15 mil PVC OR POLYETHYLENE COATING AND TAPED TO PIPE AT 20' INTERVALS.
5. TRACER WIRE SHALL COME UP TO GROUND SURFACE AT TEST STATION LOCATIONS SHOWN ON PLANS.
6. 3M ELECTRONIC SEWER MARKER BALLS TO BE DROPPED IN THE SEWER FORCE MAIN MARKER TAPE AT 25' INTERVALS.
7. ALL WORK SHOWN ON THIS DETAIL SHALL BE INCLUDED IN THE BID PRICE FOR INSTALLATION OF SEWER FORCE MAIN.

PRESSURE MAIN MARKER TAPE LOCATION (MODIFIED)

DETAIL B / C34

SCALE: NONE

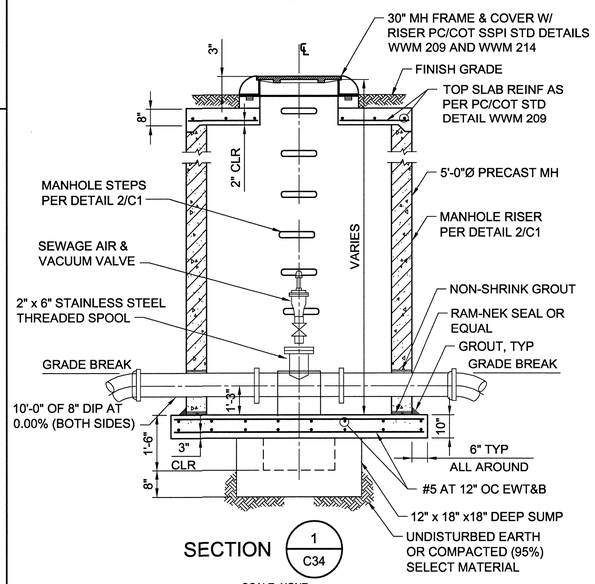

SECTION 1 / C34

SCALE: NONE

NOTES:

1. ALL VALVES ON SFM TO BE 8" PRATT BALL VALVES MODEL DS WITH MDT 3S HANDWHEELS UNLESS OTHERWISE NOTED.
2. THE INTERIOR SURFACES TO RECEIVE A 10 MIL DRY FILM THICKNESS LINING OF SP 2000R, ENVIRO-COTE 120 OR PLASITE 9085 OR OTHER APPROVED NOVALAC EPOXY LINING OR THE ENTIRE VALVE SHALL BE STAINLESS STEEL (TYPE 316) INSTEAD OF APPLYING A PROTECTIVE LINING.
3. ALL NIPPLES TO BE STAINLESS STEEL.

CATHODIC TEST STATION TYPE[1]	APPLICATION	COMMENTS
TYPE 1	NEW SFM EVERY 1000 FEET	
TYPE 4	CONNECTION OF NEW SFM TO EXISTING SFM	
TYPE 3 WITH TYPE 5 SACRIFICIAL ANODES	UTILITY CROSSINGS	WHERE DISSIMILAR PIPES CROSS, FOUR (4) ANODES REQUIRED WITH ONE (1) ANODE PLACED IN EACH QUADRANT

NOTES:

1. ALL CATHODIC TEST STATION TYPES PER PC/COT SSPI STD DETAIL W-710.
2. PIPE JOINT BONDING PER PC/COT SSPI STD DETAIL W-702 SHALL BE MODIFIED FOR 8-INCH PIPE AS FOLLOWS:
   a. BONDING CABLES SHALL BE NO. 6 HMWPE STRANDED COPPER CABLES
   b. 16-INCH MAXIMUM LENGTH PER PIPE JOINT
3. CATHODIC TEST STATIONS SHALL BE FLUSHED GRADE INSTALLATION PER PC/COT SSPI STD DETAIL W-705. LETTERING ON THE CATHODIC TEST STATION COVER SHALL BE MODIFIED TO READ "PCRWRD TEST STATION."

CATHODIC TEST STATION

DETAIL E / C34

SCALE: NONE

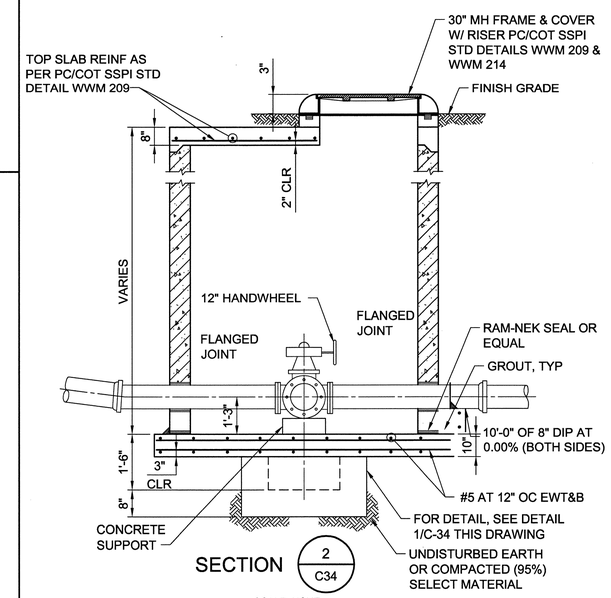

SECTION 2 / C34

SCALE: NONE

BROWN AND CALDWELL
Tucson, Arizona

NO.	REVISION	APPVD.	DATE
1	REVISIONS FOR ADDENDUM 1		1/2009
2	REVISIONS FOR ADDENDUM 2		6/2009

DESIGNED BY: JA
DRAWN BY: RAC
CHKD BY (DESIGN):
CHKD BY (FIELD SUPP.):
FIELD BOOK NO.:

Registered Professional Engineer (Civil) — Jason Alexander — 22567 — Date Signed 9/30/09 — Expires 9/30/09

PIMA COUNTY
REGIONAL WASTEWATER RECLAMATION DEPARTMENT
201 North Stone Avenue • Tucson, Arizona 85701-1207 • Phone: (520) 740-6500

ROGER ROAD WRF TO INA ROAD WRF PLANT INTERCONNECT (SANTA CRUZ INTERCEPTOR - PHASE IV)

SLUDGE FORCE MAIN SPECIAL DETAILS

133888

DATE: JULY 1, 2009
SCALE: AS SHOWN
SHEET NO.: C34 OF

IMAGES:
XREFS: 133888-STD-b4r, KMARTIN, SEAL-SRM
PSBS: \\tucson\133888 - PCWWD Plant Interconnect\Drawings\WW3-submittals\dwg-0-5-2009\C-CV\L\133888-C34.dwg Jul 01, 2009 - 2:05pm jacobsen