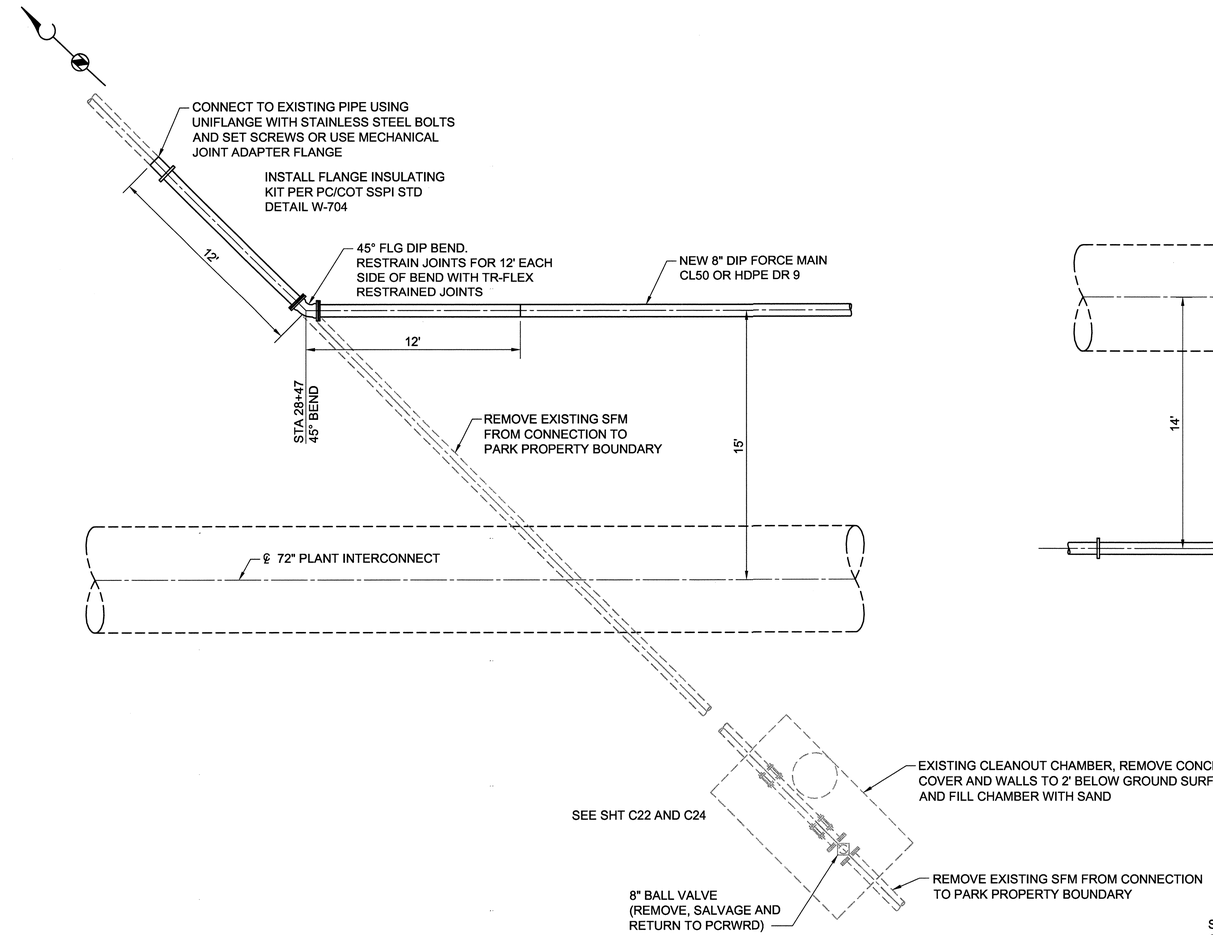

CONNECTION AT STA 28+47

DETAIL A/C31

SCALE: 1/4" = 1'-0"

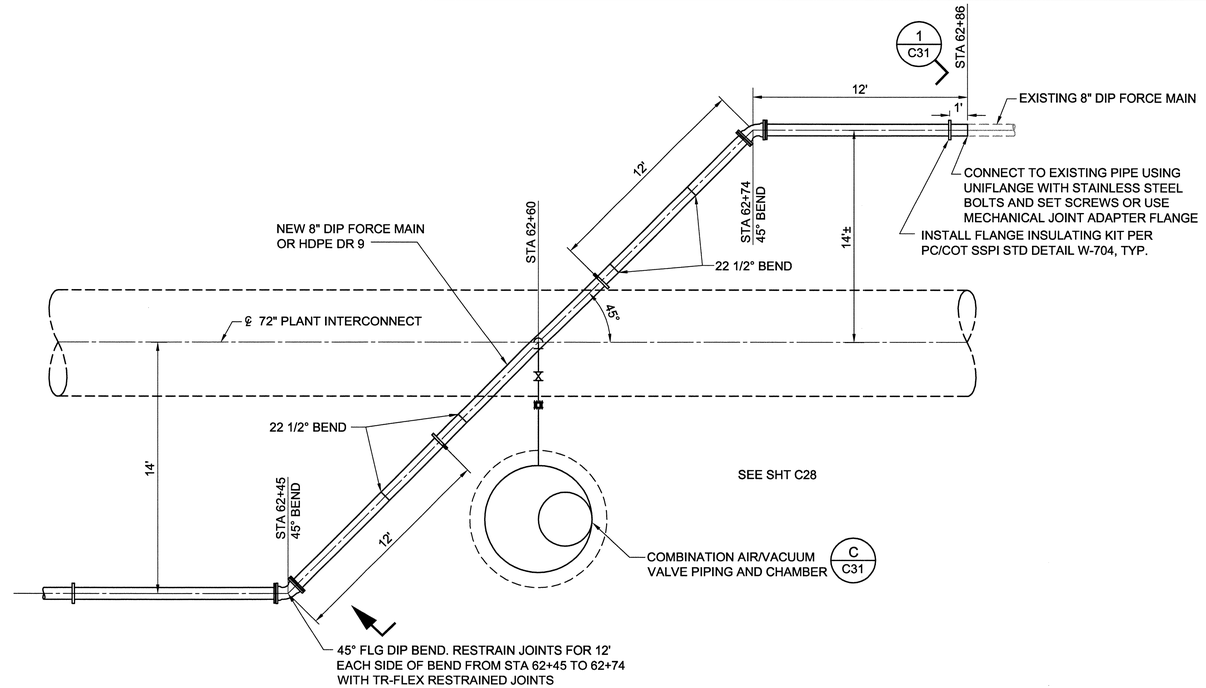

CONNECTION AT STA 62+60

DETAIL B/C31

SCALE: 1/4" = 1'-0"

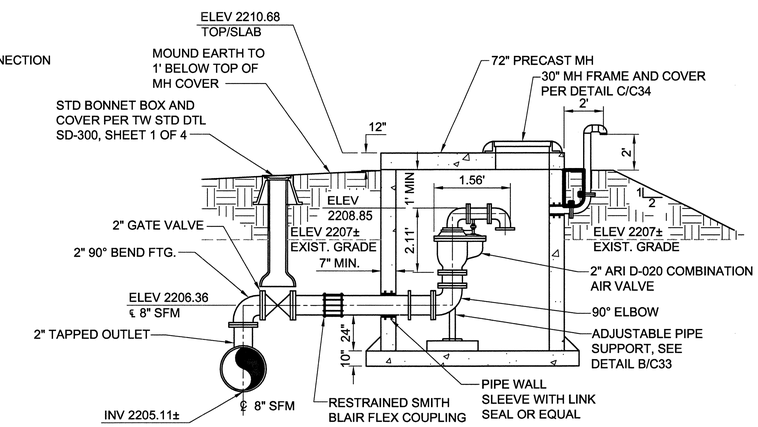

COMBINATION AIR/VACUUM VALVE PIPING AND CHAMBER

DETAIL C/C31

SCALE: NONE

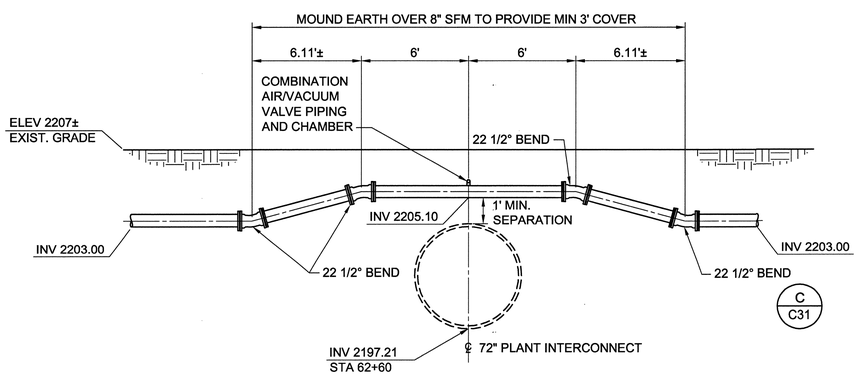

SECTION 1/C31

SCALE: 1/4"=1'-0"

GENERAL NOTE:

1. PLEASE SEE DRAWINGS PP1 - PP29 TO DETERMINE WHICH SEGMENTS OF SFM RELOCATION ARE INCLUDED IN THE GMP BID PROJECT AND WHAT PORTIONS OF THE WORK ARE INCLUDED ALTERNATIVE BIG IN THE GMP.

BROWN AND CALDWELL
Tucson, Arizona

NO.	REVISION	APPVD.	DATE
1	REVISIONS FOR ADDENDUM 1		1/2009
2	REVISIONS FOR ADDENDUM 2		6/2009

DESIGNED BY: JA
DRAWN BY: RAC
CHKD BY (DESIGN):
CHKD BY (FIELD CHIEF):
FIELD BOOK NO.:

Expires 9/30/09

PIMA COUNTY
REGIONAL WASTEWATER RECLAMATION DEPARTMENT
201 North Stone Avenue • Tucson, Arizona 85701-1207 • Phone: (520) 740-6500

ROGER ROAD WRF TO INA ROAD WRF
PLANT INTERCONNECT
(SANTA CRUZ INTERCEPTOR - PHASE IV)

8" SFM CONNECTION DETAILS
STA 28+48 AND 62+36

133888

DATE: JULY 1, 2009
SCALE: AS SHOWN
SHEET NO.: C31
OF

IMAGES:
XREFS: 133888-STD-bar, KMARTIN, SEAL-SRM
PWCS - Tucson\135868 - PCWWD Plant Interconnect\Drawings\WW3-submittals\sfdemd-5-2009\C-CIVIL\133888-C31.dwg Jul 01, 2009 - 2:03pm jacobsen