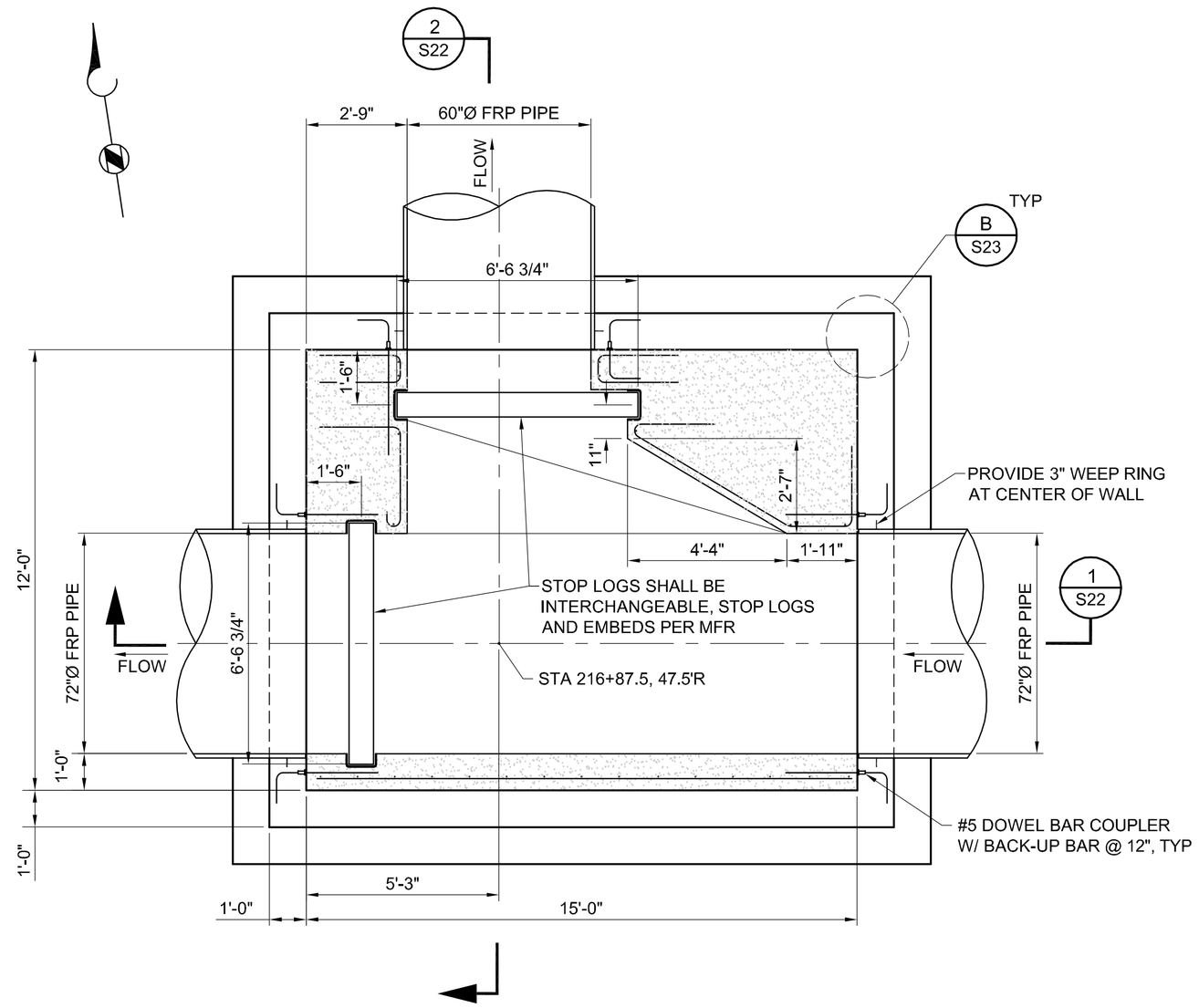

BOTTOM SLAB
PLAN
SCALE: 3/8" = 1'-0"

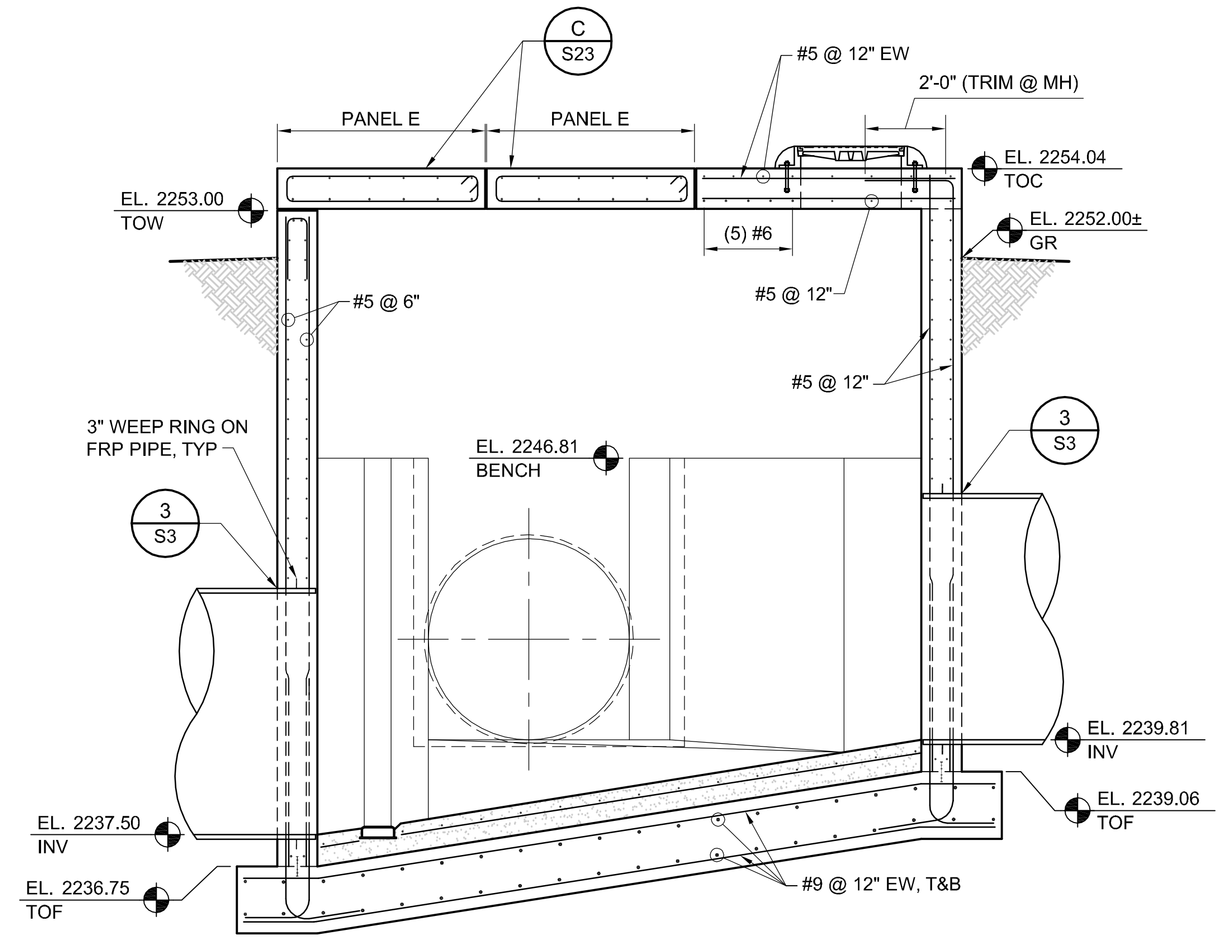

LONGITUDINAL
SECTION 1/S22
SCALE: 3/8" = 1'-0"

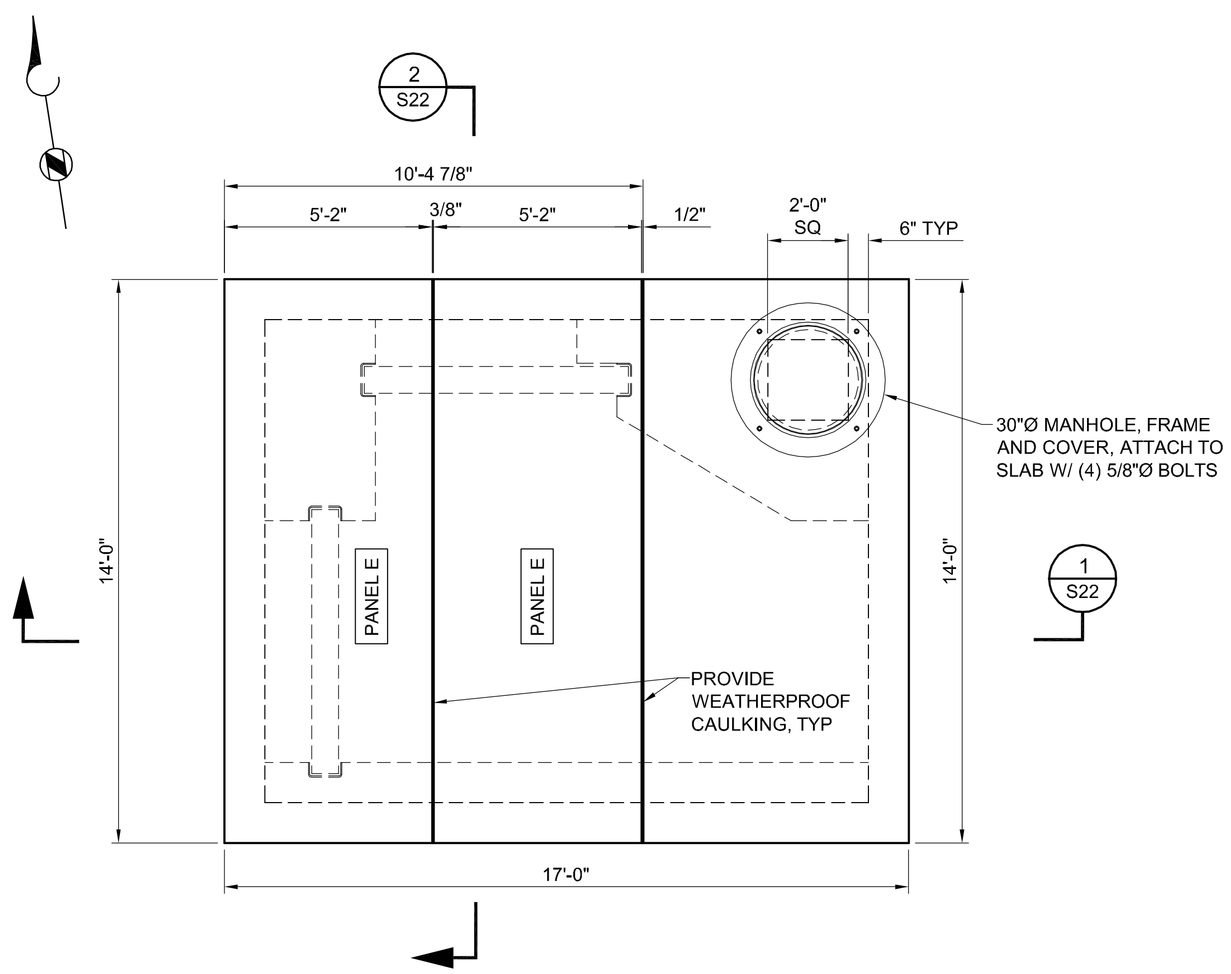

TOP SLAB
PLAN
SCALE: 3/8" = 1'-0"

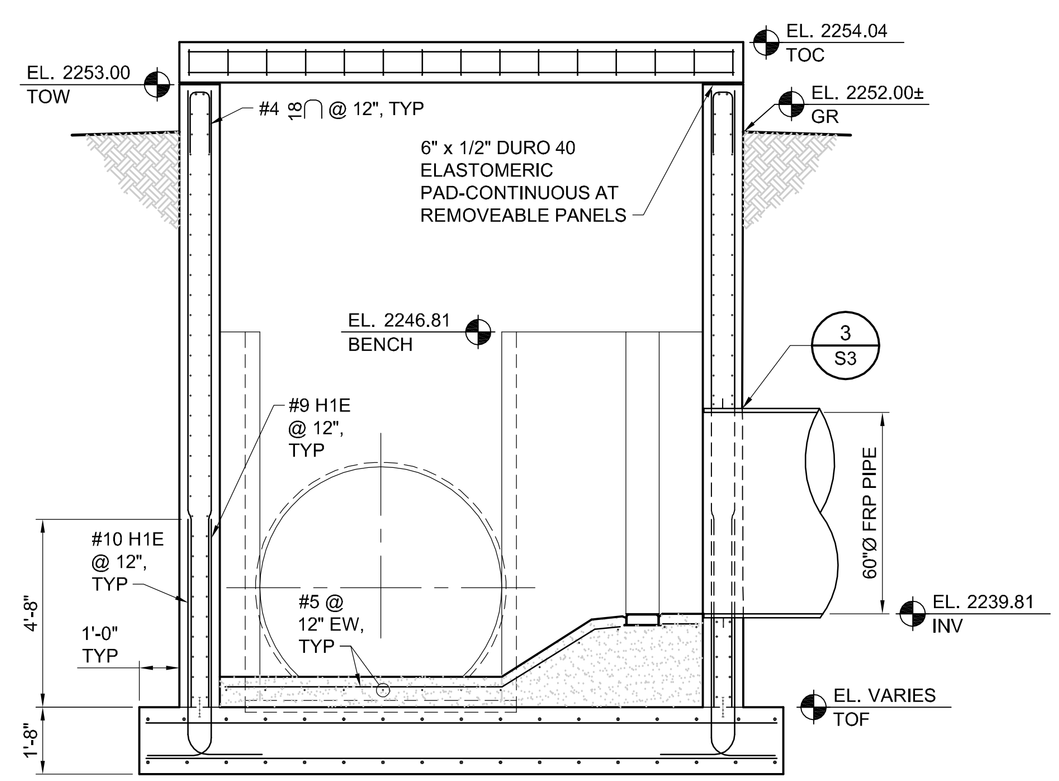

TRANSVERSE
SECTION 2/S22
SCALE: 3/8" = 1'-0"

PRELIMINARY NOT FOR CONSTRUCTION

BROWN AND CALDWELL
Tucson, Arizona

NO.	REVISION	APPV'D.	DATE
1	AMENDMENT	JLN	1/10

DESIGNED BY: RDT
DRAWN BY: RAC
CHK'D BY (DESIGN): RLA
CHK'D BY (FIELD ENGR):
FIELD BOOK NO.:

PIMA COUNTY
REGIONAL WASTEWATER RECLAMATION DEPARTMENT
201 North Stone Avenue • Tucson, Arizona 85701-1207 • Phone: (520) 740-6500

ROGER ROAD WRF TO INA ROAD WRF
PLANT INTERCONNECT
(SANTA CRUZ INTERCEPTOR – PHASE IV)
DIVERSION STRUCTURE NO. 3
PLANS AND SECTIONS

133888
DATE: JANUARY 28, 2009
SCALE: NONE
SHEET NO.: S22
OF

IMAGES:
XREFS: 133888-STD-bdr, KMARTIN, SEAL-SRM, 133888-PCI-DivStruc\No3
P:\BC - Tucson\133888 - PCWMD Plant Interconnect\Drawings\WW2-sheets\S-STRUCTURAL\133888-S22.dwg Jan 28, 2010 - 1:20pm acox