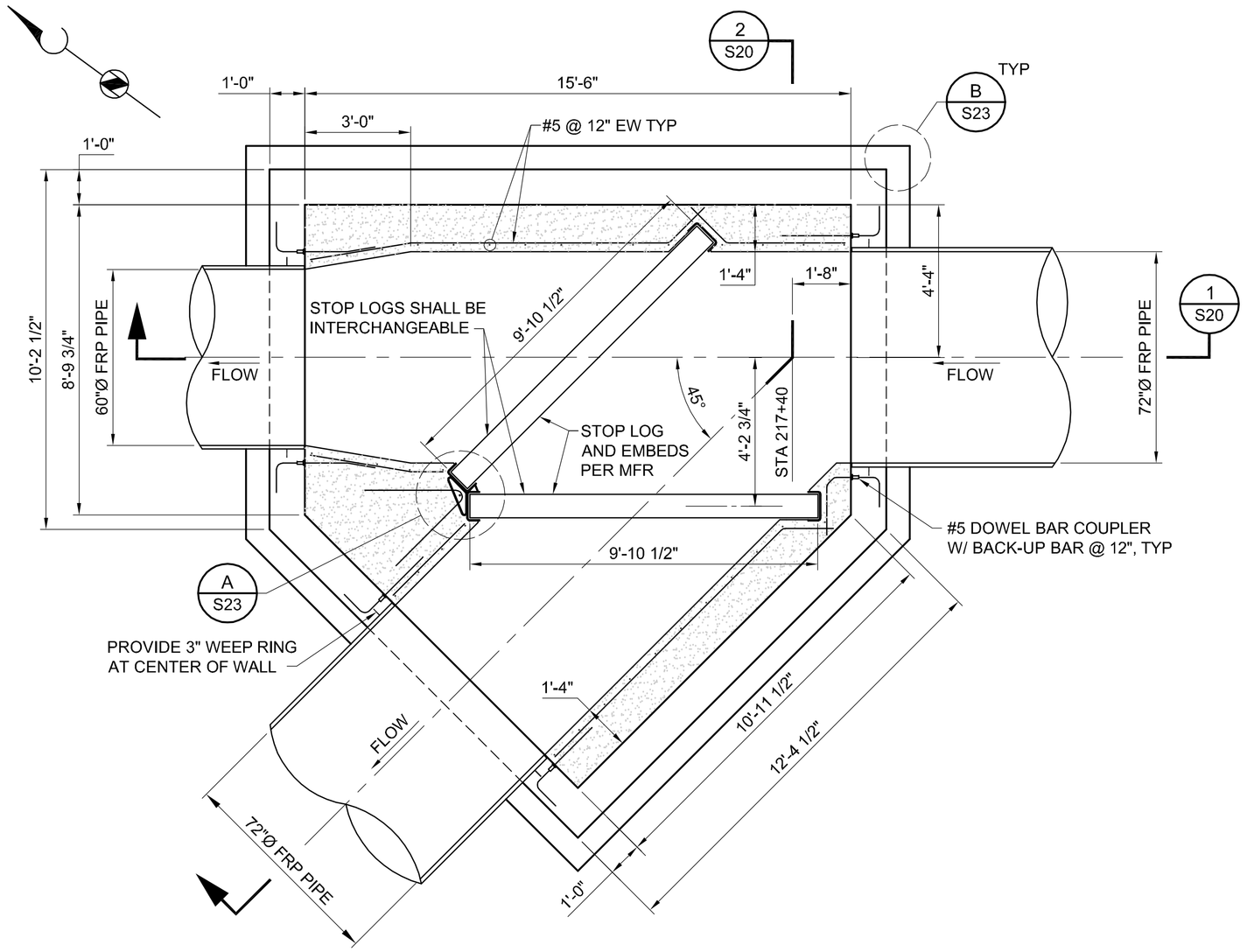


BOTTOM SLAB

PLAN

SCALE: 3/8" = 1'-0"

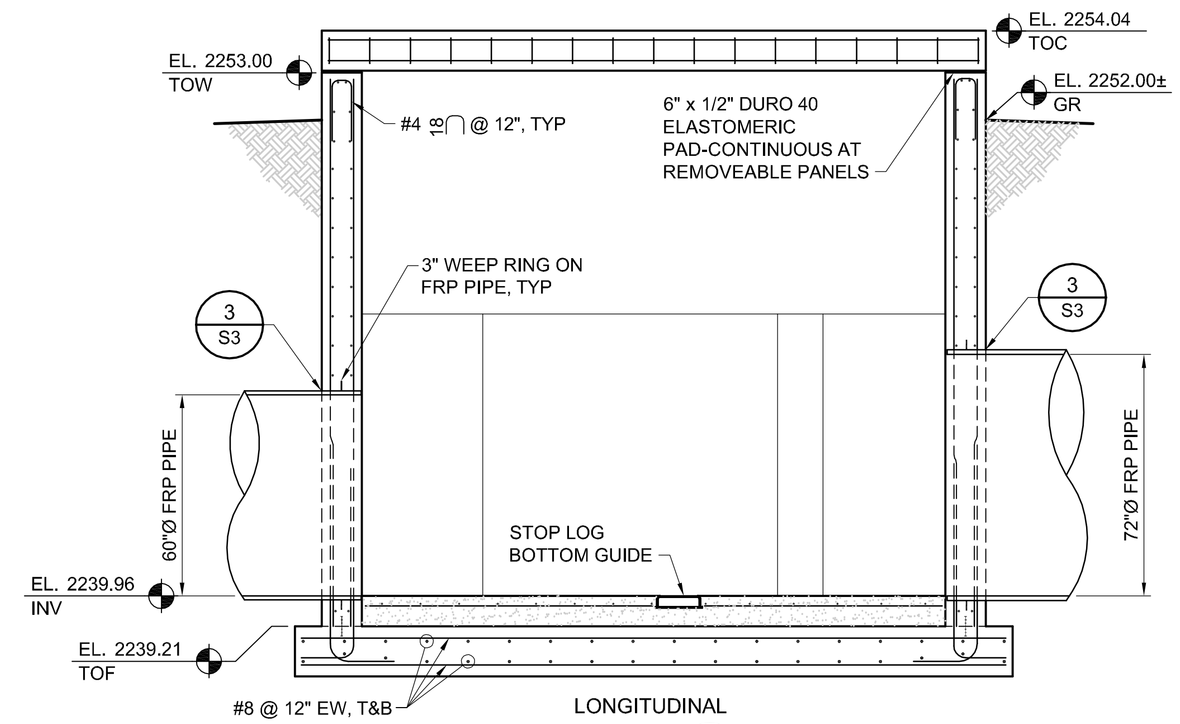


LONGITUDINAL

SECTION 1 S20

SCALE: 3/8" = 1'-0"

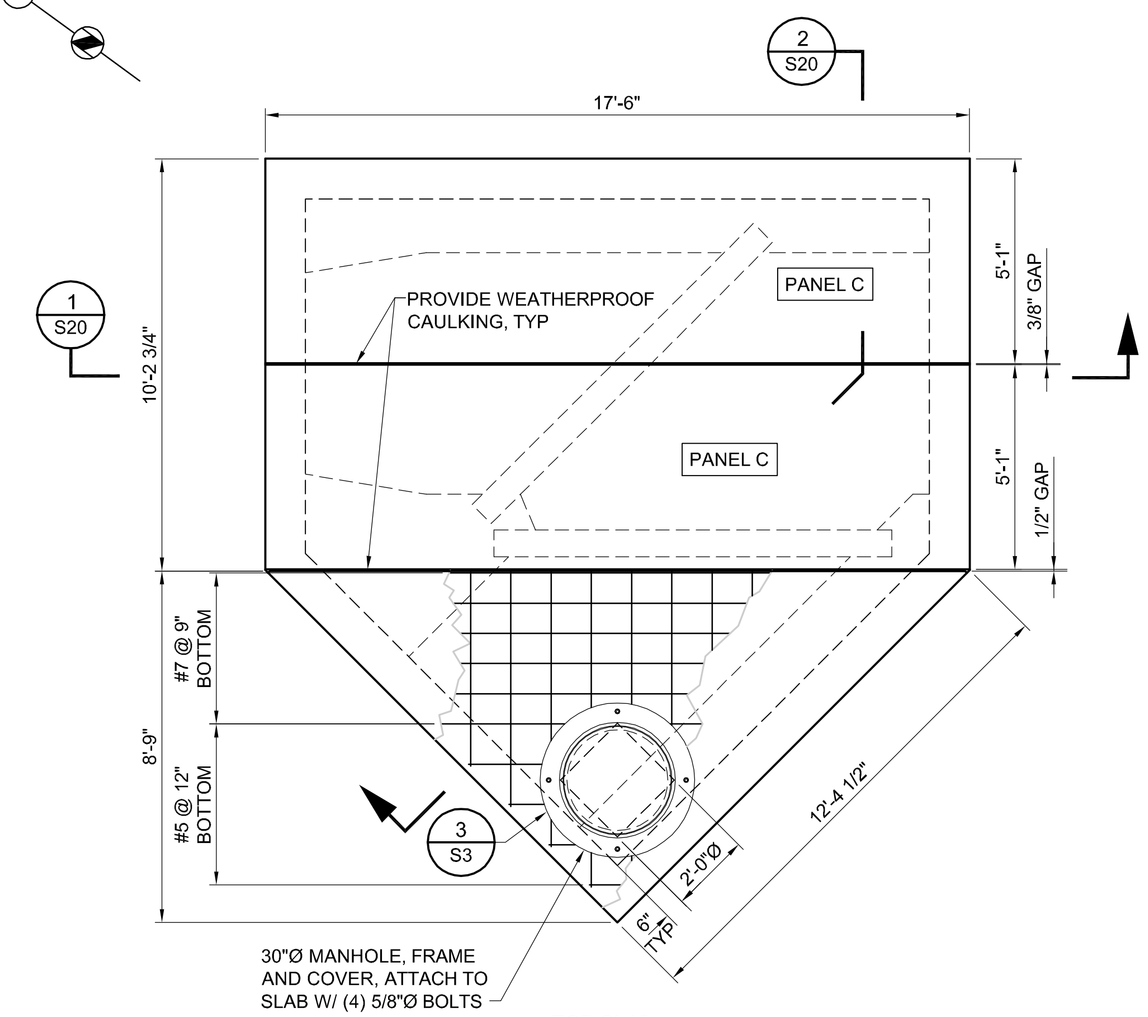


TOP SLAB

PLAN

SCALE: 3/8" = 1'-0"

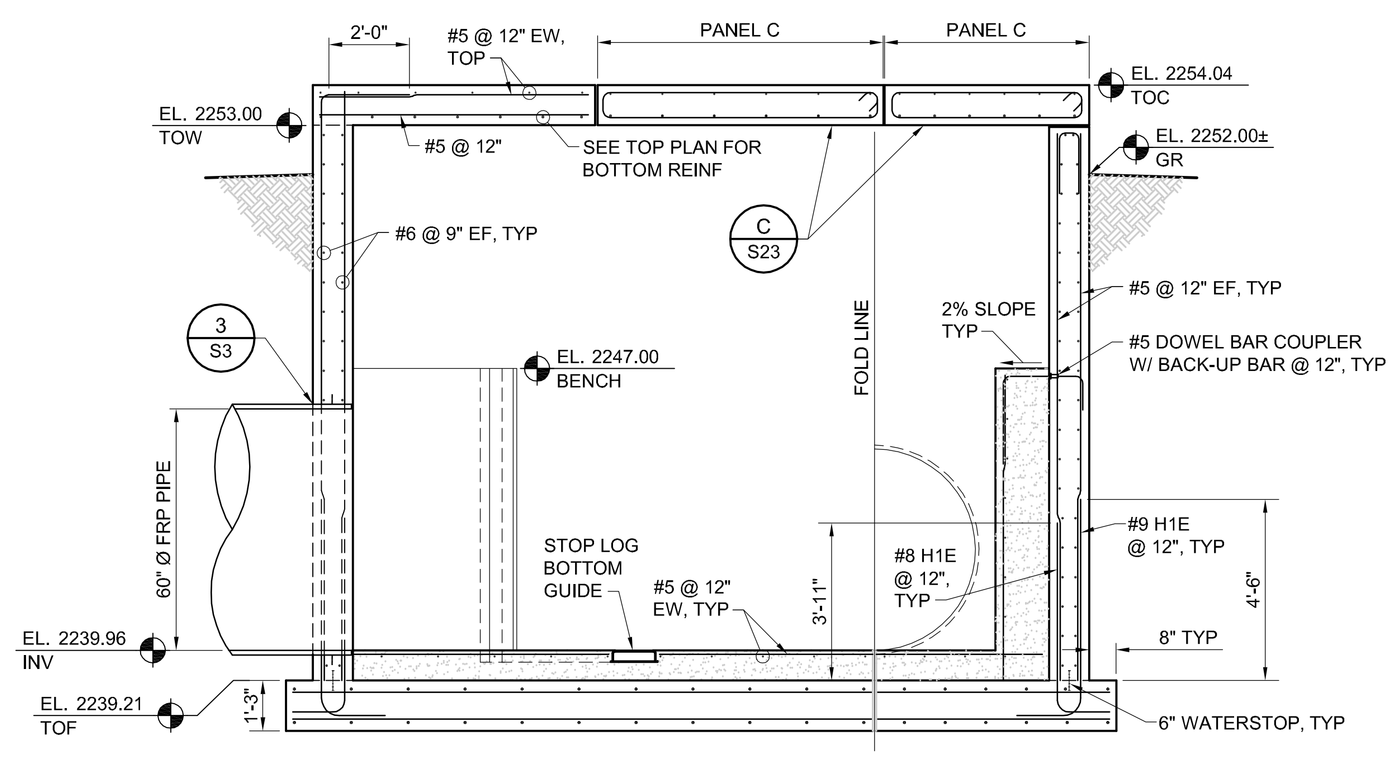


TRANSVERSE

SECTION 2 S20

SCALE: 3/8" = 1'-0"

PRELIMINARY NOT FOR CONSTRUCTION

BROWN AND CALDWELL
Tucson, Arizona

| NO. | REVISION | APPVD. | DATE |
|---|---|---|---|
| 1 | AMENDMENT | JLN | 1/10 |

DESIGNED BY: RDT
DRAWN BY: RAC
CKD BY DESIGN: RLA
CKD BY FIELD ENGR:
FIELD BOOK NO.:

PIMA COUNTY
REGIONAL WASTEWATER RECLAMATION DEPARTMENT
201 North Stone Avenue • Tucson, Arizona 85701-1207 • Phone: (520) 740-6500

ROGER ROAD WRF TO INA ROAD WRF PLANT INTERCONNECT (SANTA CRUZ INTERCEPTOR - PHASE IV)

JUNCTION STRUCTURE NO. 1
PLANS AND SECTIONS

133888

DATE: JANUARY 28, 2009

SCALE: NONE

SHEET NO.: S20 OF

IMAGES:
XREFS: 133888-STD-bdr, KMARTIN, SEAL-SRM, 133888-PC-IS_1-2
P:\BC - Tucson\133888 - PCWMD Plant Interconnect\Drawings\WW2-sheets\S-STRUCTURAL\133888-S20.dwg Jan 28, 2010 - 1:19pm ezcox